GEMÜ 4242

Combi switchbox with integrated pilot valve

EN **Operating instructions**

further information
webcode: GW-4242

All rights including copyrights or industrial property rights are expressly reserved.

Keep the document for future reference.

© GEMÜ Gebr. Müller Apparatebau GmbH & Co. KG
20.10.2022

Contents

1 General information 4
1.1 Information 4
1.2 Symbols used 4
1.3 Definition of terms 4
1.4 Warning notes 4
2 Safety information 5
3 Product description 5
3.1 Construction 5
3.2 LED displays 6
3.3 Description 7
3.4 Function 7
3.5 Product label 7
4 GEMÜ CONEXO 7
5 Correct use 7
6 Order data 9
7 Technical data 11
8 Dimensions 14
8.1 Size 1 14
8.2 Size 2 14
9 Manufacturer's information 15
9.1 Delivery 15
9.2 Packaging 15
9.3 Transport 15
9.4 Storage 15
10 Assembly and installation 15
10.1 Mounting kit assembly 15
10.2 Mounting the combi switchbox on linear actuators 16
10.3 Mounting the combi switchbox on quarter turn actuators 18
11 Pneumatic connection 19
11.1 Size 1, standard, single acting 19
11.2 Size 1, standard, double acting 19
11.3 Size 1, compact version 19
11.4 Size 2, standard, single acting 19
11.5 Size 2, standard, double acting (only available for 75 mm version) 19
12 Electrical connection 20
12.1 Electrical connection 20
12.2 Potential equalization – special function X and Y 20
12.3 24 V, ordering option Fieldbus, code 000 21
12.4 IO-Link, ordering option Fieldbus, code IOL 21
12.5 AS-Interface, ordering option Fieldbus, code A2, A3, A4 21
12.6 DeviceNet, ordering option Fieldbus, code DN 22
13 Commissioning 22
14 Specific data - IO-Link 25
14.1 Process data 25
14.2 Parameter overview 26
14.3 Description of parameter values 27
14.4 Events 31
15 Specific data - AS-Interface 32
15.1 Inputs 32
15.2 Outputs 33
15.3 Switch point parameters 34
15.4 Error analysis 35
16 Specific data - DeviceNet 35
16.1 General data 35
16.2 Net topology - DeviceNet system 36
16.3 Inputs 36
16.4 Outputs 36
16.5 Parameter overview 38
17 Manual override 40
18 Troubleshooting 40
18.1 LED error message 40
18.2 Troubleshooting 40
19 Inspection and maintenance 41
20 Disassembly 42
21 Disposal 42
22 Returns 42
23 Declaration of Incorporation according to 2006/42/EC (Machinery Directive) 43
24 Declaration of conformity according to 2014/30/EU (EMC Directive) 44
25 Declaration of Conformity in accordance with 2014/34/EU (ATEX) 45

1 General information

1.1 Information

- The descriptions and instructions apply to the standard versions. For special versions not described in this document the basic information contained herein applies in combination with any additional special documentation.
- Correct installation, operation, maintenance and repair work ensure faultless operation of the product.
- Should there be any doubts or misunderstandings, the German version is the authoritative document.
- Contact us at the address on the last page for staff training information.

1.2 Symbols used

The following symbols are used in this document:

Symbol	Meaning
●	Tasks to be performed
▶	Response(s) to tasks
–	Lists

The following LED symbols are used in the documentation:

Symbol	LED conditions
○	Off
●	Lit (on)
☀	Flashing

1.3 Definition of terms

Speed-^{AP}function

Speed Assembly and Programming, a particularly user-friendly commissioning function for fast mounting, automated setting and initialization of GEMÜ products. Dependent on type, activation uses an external impulse signal or existing precautions on the device (magnetic or housing switch). Changeover to normal operating mode takes place automatically after successful completion.

Working medium

The medium that flows through the GEMÜ product.

Control medium

The medium whose increasing or decreasing pressure causes the GEMÜ product to be actuated and operated.

Control function

The possible actuation functions of the GEMÜ product.

1.4 Warning notes

Wherever possible, warning notes are organised according to the following scheme:

SIGNAL WORD	
Possible symbol for the specific danger	Type and source of the danger ▶ Possible consequences of non-observance. ● Measures for avoiding danger.

Warning notes are always marked with a signal word and sometimes also with a symbol for the specific danger.

The following signal words and danger levels are used:

⚠ DANGER	
	Imminent danger! ▶ Non-observance can cause death or severe injury.

⚠ WARNING	
	Potentially dangerous situation! ▶ Non-observance can cause death or severe injury.

⚠ CAUTION	
	Potentially dangerous situation! ▶ Non-observance can cause moderate to light injury.

NOTICE	
	Potentially dangerous situation! ▶ Non-observance can cause damage to property.

The following symbols for the specific dangers can be used within a warning note:

Symbol	Meaning
	Danger - corrosive materials
	Danger - hot surfaces

2 Safety information

The safety information in this document refers only to an individual product. Potentially dangerous conditions can arise in combination with other plant components, which need to be considered on the basis of a risk analysis. The operator is responsible for the production of the risk analysis and for compliance with the resulting precautionary measures and regional safety regulations.

The document contains fundamental safety information that must be observed during commissioning, operation and maintenance. Non-compliance with these instructions may cause:

- Personal hazard due to electrical, mechanical and chemical effects.
- Hazard to nearby equipment.
- Failure of important functions.
- Hazard to the environment due to the leakage of dangerous substances.

The safety information does not take into account:

- Unexpected incidents and events, which may occur during installation, operation and maintenance.
- Local safety regulations which must be adhered to by the operator and by any additional installation personnel.

Prior to commissioning:

1. Transport and store the product correctly.
2. Do not paint the bolts and plastic parts of the product.
3. Carry out installation and commissioning using trained personnel.
4. Provide adequate training for installation and operating personnel.
5. Ensure that the contents of the document have been fully understood by the responsible personnel.
6. Define the areas of responsibility.
7. Observe the safety data sheets.
8. Observe the safety regulations for the media used.

During operation:

9. Keep this document available at the place of use.
10. Observe the safety information.
11. Operate the product in accordance with this document.
12. Operate the product in accordance with the specifications.
13. Maintain the product correctly.
14. Do not carry out any maintenance work and repairs not described in this document without consulting the manufacturer first.

In cases of uncertainty:

15. Consult the nearest GEMÜ sales office.

3 Product description

3.1 Construction

Item	Name	Materials		
		Size 1, 30 mm	Size 2, 75 mm	Size 2, 30 mm
1	Housing cover – standard version:	PC	PC	PC
	Housing cover – compact version:	PP	-	-
2	Housing base	Anodized aluminium or stainless steel	PPS	PPS
3	Electrical connection	Threaded piece: Stainless steel (1.4305) insert: PA	Threaded piece: PPS or stainless steel (1.4305) insert: PA	Threaded piece: PPS or stainless steel (1.4305) insert: PA
4	Adapter piece	Stainless steel (1.4305)	Stainless steel (1.4305)	Stainless steel (1.4305)
5	Mounting kit, valve specific	Valve-specific materials	Valve-specific materials	Valve-specific materials
	Seals	EPDM and NBR	NBR	NBR

3.2 LED displays

3.2.1 Status LEDs

As well as the electrical position feedback and error analysis, a visual signal is emitted by LEDs that can be seen from above as well as a high visibility LED.

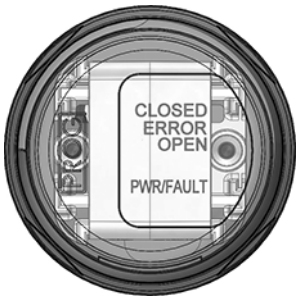

24 V / AS-Interface / IO-Link version

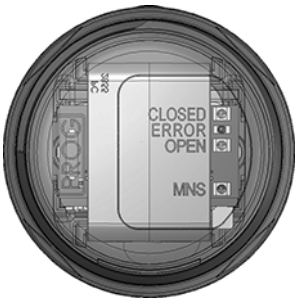

DeviceNet version

LED	Colour		Function
	Standard [1]	Inversed [2]	
CLOSED	Green	Orange	Process valve in CLOSED position
ERROR	Red	Red	Error
OPEN	Orange	Green	Process valve in OPEN position
High visibility LED	Green	Orange	Process valve in CLOSED position
	Orange	Green	Process valve in OPEN position
	Alternating green/orange	Alternating green/orange	Programming mode
	Flashes orange	Flashes orange	Error
PWR/FAULT (24 V version, code 000)	Green		Power on
	Red		Supply voltage too low
PWR/FAULT [3] (ASi version, code A2, A3, A4)	Green		Communication active
	Red		Communication error/address 0
	Flashes red		Device error
PWR/FAULT (IO-Link version, code IOL)	Green		SIO operation
	Flashes green		Communication active
	Red		Communication error or supply voltage too low

LED	Colour		Function
	Standard [1]	Inversed [2]	
MNS [4] (DeviceNet version, code DN)	Flashes green		Ready for communication
	Green		Communication active
	Flashes red		Communication error
	Red		Communication error, device has disconnected independently from the bus

1) **Option**
Code 00: Without
Code 01: Manual override

2) **Option**
Code 40: Inversed LED colours
Code 41: Inversed LED colours, manual override

3) The flash codes of the PWR/FAULT LED are specified according to AS-Interface and provide feedback about the status of AS-Interface communication.

4) The flash codes of the MNS LEDs are specified according to DeviceNet and give feedback about the status of the DeviceNet communication.

For order codes see chapter "Order data"

3.2.2 LED conditions

Function	CLOSED	ERROR	OPEN	High visibility LED
Valve in OPEN position	○	○	●	●
Valve in CLOSED position	●	○	○	●
Programming mode	☀	○	☀	☀
	OPEN / CLOSED flash alternately			flashes alternately

LED conditions							
●	lit (on)	~	irrelevant	☀	flashes	○	off

3.3 Description

The GEMÜ 4242 combi switchbox is suitable for installation on pneumatically operated linear actuators. The position of the valve spindle is reliably electronically detected and evaluated using play-free and non-positive mounting. Integrated pilot valves enable direct activation of the process valve connected to them. Intelligent microprocessor-controlled functions facilitate commissioning and support during operation. The current position of the valve is displayed via high-visibility LEDs and fed back via electrical signals.

3.4 Function

The GEMÜ 4242 combi switchbox controls the pneumatic actuator via integrated pilot valves and simultaneously indicates the current position of the valve. Should the valve be opened, the internally installed pilot valves control the pneumatic actuator accordingly. The spindle in the combi switchbox consequently moves upwards and indicates that the valve is OPEN using the high visibility LEDs and communication interface. Should the valve be closed, the internally installed pilot valves control the pneumatic actuator accordingly. The spring in the mounting kit simultaneously pushes the spindle in the combi switchbox downwards and indicates that the valve is CLOSED using the high visibility LEDs and communication interface.

3.5 Product label

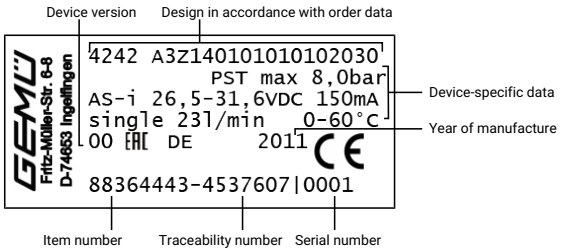

The manufacturing month is coded under the traceability number and can be requested from GEMÜ. The product was manufactured in Germany.

4 GEMÜ CONEXO

Order variant

In the corresponding design with CONEXO, this product has an RFID chip (1) for electronic identification purposes. The position of the RFID chip can be seen below. The CONEXO pen helps read out information stored in the RFID chips. The CONEXO app or CONEXO portal is required to view this information.

Installing the RFID chip (1)

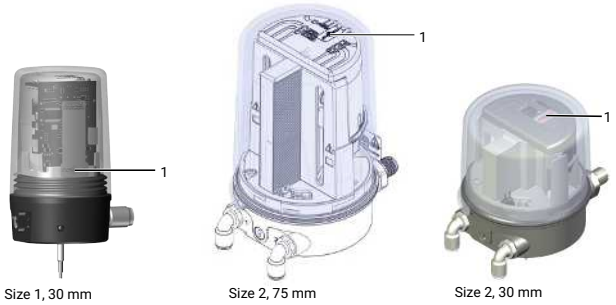

For further information please read the operating instructions for CONEXO products or the CONEXO datasheet.

Products such as the CONEXO app, the CONEXO portal and the CONEXO pen are not included in the scope of delivery and need to be ordered separately.

5 Correct use

⚠ DANGER

Danger of explosion

- ▶ Risk of severe injury or death.
- ● Only versions that have been approved according to their technical data may be used in potentially explosive environments.

⚠ WARNING

Improper use of the product

- ▶ Risk of severe injury or death.
- ▶ Manufacturer liability and guarantee will be void.
- ● Only use the product in accordance with the operating conditions specified in the contract documentation and in this document.

The GEMÜ 4242 with integrated pilot valve is designed for pneumatic actuators. The product has a microprocessor-controlled intelligent position sensor as well as an analogue travel sensor system (potentiometer). It is non-positively connected with the actuator spindle by means of a mounting kit (spring, operating bush). The valve end positions and the integrated travel sensor can be controlled via the electrical connections. The pneumatic valve actuator is directly activated by an integrated 3/2-way pilot valve. The housing cover must not be removed.

5.1 Product without special function X or Y

The product is not intended for use in potentially explosive areas.

5.2 Product with special function Y

The product with special function Y is UL/CSA certified and protected against explosion in accordance with ISA 12.12.01 (see "Technical data").
The product with special function Y can be connected to switches, power supplies, PLC outputs and PLC inputs.
The energy supply must be equipped with a switch or an overcurrent protective device in the system. The switch or overcurrent protective device must be placed in a suitable and accessible position and also labelled as an isolating device for the product with special function Y.
The product user is responsible for providing connections that comply with standards, a locking mechanism, cable compatibility and warning signs.
Suitable locking clips must be used to secure the circular connectors against becoming unintentionally loose or being loosened without the use of tools.
Installation, operation and maintenance must only be carried out by qualified trained personnel.
Do not repair the device yourself if it is faulty. Instead, replace it with an equivalent new device. Repairs must only be carried out by the manufacturer!
The device must only be used if its materials are resistant against mechanical and/or chemical influences or corrosion under the respective operating conditions to such a sufficient degree that the explosion protection is not impaired or nullified.

5.3 Product with special function X

The product with ordering option Special version X is intended for use in potentially explosive areas of zone 2 with gases, mists or vapours and zone 22 with combustible dusts in accordance with EU directive 2014/34/EU (ATEX) and IECEx.

The product has the following explosion protection marking:

ATEX

Gas: Ⓔx II 3G Ex ec nC IIC T4 Gc X

Dust: ⒺxII 3D Ex tc IIIC T 80 °C Dc X

IECEx

Gas: Ⓔx Ex ec nC IIC T4 Gc

Dust: Ⓔx Ex tc IIIC T80°C Dc

Certificate: IECEx IBE 19.0011 X

The product has been developed in compliance with the following harmonised standards:

- IEC 60079-0: 2011 (EN 60079-0:2012+A11:2013)
- IEC 60079-15: 2010 (EN 60079-15:2010)
- IEC 60079-31: 2013 (EN 60079-31:2014)
- IEC 60079-7: 2017 (EN 60079-7+A1:2015)

Use of the product is permissible in the following ambient temperature ranges: 0 °C to +40 °C

For use in potentially explosive areas, the following conditions or operation limits must be observed:

Index X is applied to the explosion protection marking.

The following special conditions must be complied with:

1. Connection cables and connectors must be protected from damage.
2. Layers of dust > 5 mm must be removed.
3. Warning label "Danger from electrostatic build-up".
4. Warning label "Do not disconnect when live".

The housing must be installed protected from mechanical influences.

RFID chips must not be read out in potentially explosive areas.

6 Order data

The order data provide an overview of standard configurations.

Please check the availability before ordering. Other configurations available on request.

Note: A valve specific mounting kit is required for assembly. For designing the mounting kit, the valve type, nominal size, control function and actuator size must be stated.

Order codes

1 Type	Code
Combi switchbox	4242

2 Fieldbus	Code
Without, 24 V version	000
AS-Interface, 31 Slaves, 4E/4A	A2
AS-Interface, 62 Slaves, 4E/3A	A3
AS-Interface, 62 slaves, 8I/8O	A4
DeviceNet	DN
IO-Link	IOL

3 Accessory	Code
Accessories	Z

4 Housing material	Code
Stainless steel base, PC cover	07
Aluminium base, PC cover	14
PPS base, PC cover	01

5 Function	Code
Combi switchbox, single acting	01
Combi switchbox, double acting	02
Combi switchbox, compact version, single acting	K1

6 Electrical connection	Code
M12 plug, 5-pin	01
M12 plug, 8-pin	02
M12 plug, 5-pin, stainless steel, size 2	S1
M12 plug, 8-pin, stainless steel, size 2	S2

7 Pneumatic connection	Code
Connection thread M5 for size 1, connection thread G1/8 for size 2	01
Air supply 4 mm angled connection, exhaust air 4 mm angled connection	02
Air supply 4 mm T-connection, exhaust air 4 mm angled connection	03
Air supply 6 mm angled connection, exhaust air 6 mm angled connection	04
Air supply 6 mm T-connection, exhaust air 6 mm angled connection	05
Connection thread M5 for size 1, connection thread G1/8 for size 2 (for IP67 or piped air outlet)	E1
Air supply 6 mm angled connection, exhaust air 6 mm angled connection (for IP67 or piped air outlet)	E4
Air supply 1/4" angled connection, exhaust air 1/4" angled connection	U8

8 Option	Code
Without	00
Manual override	01
Inversed LED colours	40
Inversed LED colours, manual override	41
Inversion of LED colours deactivation of high visibility position indicator	80

9 Flow rate	Code
14 Nl/min, size 1	01
23 Nl/min (Booster), size 1	02
250 Nl/min, size 2	03

10 Travel sensor version	Code
Potentiometer 30 mm length, size 1 and 2	030
Potentiometer 75 mm length, size 2	075

11 Special version	Code
Without	
ATEX(2014/34/EU), IECEx	X
NEC 500 and UL/CSA approval	Y

Order example

Ordering option	Code	Description
1 Type	4242	Combi switchbox
2 Fieldbus	000	Without, 24 V version, with IO-Link
3 Accessory	Z	Accessories
4 Housing material	07	Stainless steel base, PC cover
5 Function	01	Combi switchbox, single acting
6 Electrical connection	01	M12 plug, 5-pin
7 Pneumatic connection	01	Connection thread M5 for size 1, connection thread G1/8 for size 2
8 Option	01	Manual override
9 Flow rate	01	14 Nl/min, size 1
10 Travel sensor version	030	Potentiometer 30 mm length, size 1 and 2
11 Special version		Without

7 Technical data

7.1 Medium

Working medium: Quality classes to DIN ISO 8573-1

Dust content: Class 3, max. particle size 5 µm, max. particle density 5 mg/m³

Pressure dew point:

Size 1

Class 3, max. pressure dew point -20 °C

Size 2

Class 4, max. pressure dew point +3 °C

Oil content:

Size 1

Class 3, max. oil concentration 1 mg/m³

Size 2

Class 5, max. oil concentration 25 mg/m³

7.2 Temperature

Ambient temperature:

Standard or with special version code Y	0–60 °C
Special version code X	0–50 °C

Control medium temperature: 0 — 50 °C

Storage temperature: -10 — 70 °C

7.3 Pressure

Operating pressure:

Size 1	Size 2
1 to 10 bar (at 40 °C) 1 to 8 bar (at 60 °C)	2 to 7 bar

Observe the maximum control pressure of the valve actuator.

Flow rate:

Size 1	Size 2
14 Nl/min 23 Nl/min	250 Nl/min

7.4 Product conformities

EMC Directive: 2014/30/EU

Technical standards used:

	24 V
Interference emission	EN 61000-6-3
Interference resistance	EN 61000-6-2

	IO-Link
Interference emission	EN 61000-6-3
Interference resistance	EN 61000-6-2

	AS-Interface
Interference emission	acc. to AS-Interface Spec. 3.0
Interference resistance	acc. to AS-Interface Spec. 3.0

	DeviceNet
Interference emission	EN 61000-6-3
Interference resistance	EN 61000-6-2

Explosion protection: ATEX (2014/34/EU) and IECEx, order code Special version X
NEC 500 (ISA 12.12.01), order code Special version Y

ATEX marking: Gas: Ⓔx II 3G Ex ec nC IIC T4 Gc X
Dust: ⒺxII 3D Ex tc IIIC T 80 °C Dc X

IECEx marking: Gas: Ⓔx Ex ec nC IIC T4 Gc
Dust: Ⓔx Ex tc IIIC T80°C Dc
Certificate: IECEx IBE 19.0011 X

NEC marking: Class I, Division II, Groups C & D, T4

Approvals:

	24 V	AS-Interface	IO-Link	DeviceNet
Fieldbus/ Communication	-	Travel sensor version 030: AS-Interface certificate No. 96001 Travel sensor version 075: AS-Interface certificate No. 125601	Travel sensor version 030: IO-Link specification V 1.1 Travel sensor version 075: IO-Link specification V 1.1	n.n.

SIL:

Product description: GEMÜ electrical position indicator 4242
Device type: B
Valid software version: V1.1.X.X
Safety function: The fail-safe state is defined as a High (24 V DC) signal at pin 4 (device version 24 V IO-Link), if the current position of the integrated travel sensor is smaller than the switch point CLOSED (default setting 12%).
HFT (Hardware Fault Tolerance): 0
MTTR (Mean Time To Restoration): 24 hours
MTBF (Mean Time Between Failures): 232 years

Further information, see SIL safety manual

7.5 Mechanical data

Installation position: Optional

Weight:

Size 1	Size 2	
	75 mm	30 mm
Aluminium: 320 g Stainless steel: 600 g	420 g	350 g

Protection class: IP 65
IP 67 is achieved by piping away the exhausting air
IP NEMA 4X (UL 61010-1, UL 50E), only available as special version code Y

Travel sensor:

	Size 1	Size 2	
		75 mm	30 mm
Minimum stroke:	2 mm	5 mm	2 mm
Maximum stroke:	30 mm	75 mm	30 mm
Hysteresis:	0.2 mm	0.5 mm	0.2 mm
Accuracy:	0.2% Full Scale		

7.6 Electrical data

Electrical connection type:

24 V	IO-Link / AS-Interface / DeviceNet
1 x 8-pin M12 plug (A-coded)	1 x 5-pin M12 plug (A-coded)

Supply voltage:

24 V DC (18 to 30 V DC) (according to IO-Link specifications)
26.5 to 31.6 V DC (according to AS-Interface specifications)
11 to 25 V DC (according to DeviceNet specifications)

Current consumption:

Flow rate code	24 V	IO-Link	AS-Interface	DeviceNet
01	typically 80 mA	typically 80 mA	typically 100 mA	typically 65 mA
02	typically 120 mA	typically 120 mA	typically 150 mA	typically 100 mA
03	typically 100 mA	typically 100 mA	typically 120 mA	typically 85 mA

Duty cycle: Continuous duty

Electrical protection class: III

Reverse battery protection: yes

Line fuse: 630 mA medium time lag, for order code Fieldbus 000

Switching characteristic:

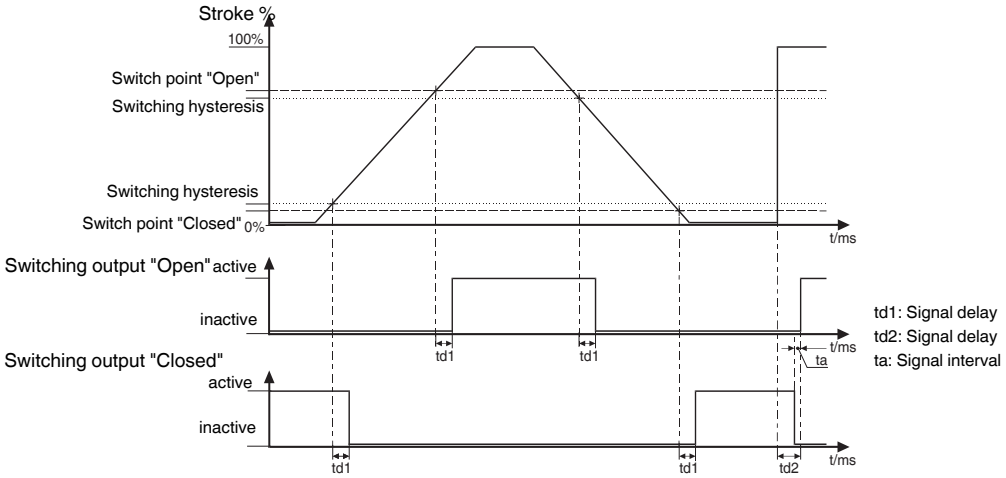

Switch points: The data in percent refer to the programmed stroke, before each end position

Switch points:

	Size 1	Size 2	
		75 mm	30 mm
Default setting switch point CLOSED	12%	12%	12%
Default setting switch point OPEN	25%	25%	25%
Min. switch point CLOSED	0.8 mm	2 mm	0.8 mm
Min. switch point OPEN	0.5 mm	1.25 mm	0.5 mm

If the percentage switch points dependent on the programmed stroke are smaller than the permissible min. switch points, the min. switch points apply automatically.

8 Dimensions

8.1 Size 1

Only 30 mm potentiometer length available

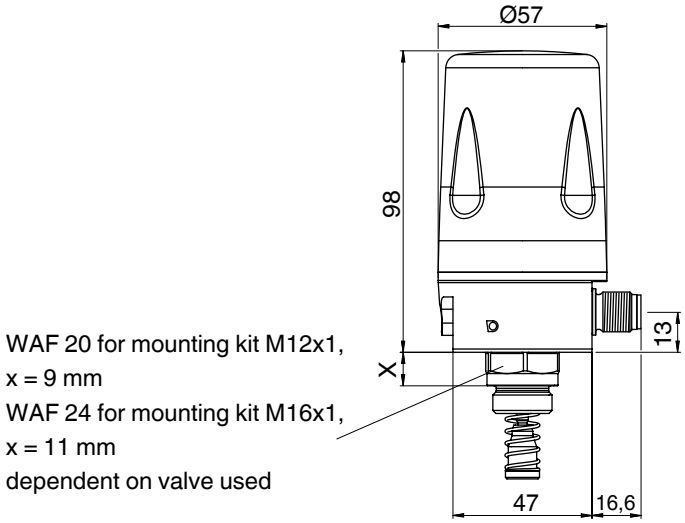

Standard

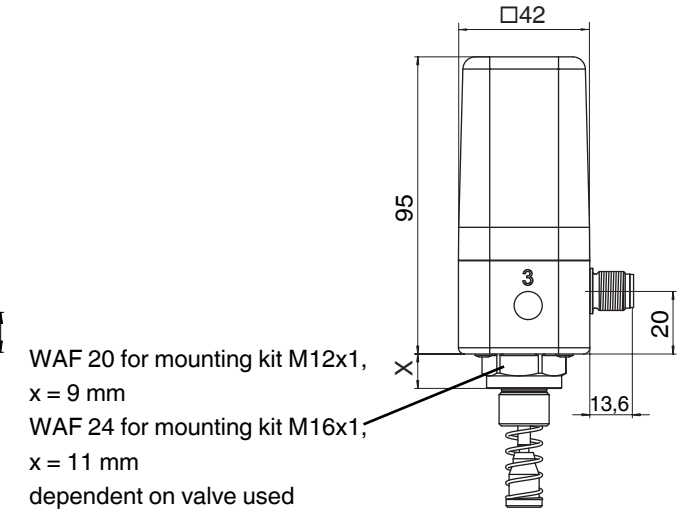

Compact

Dimensions in mm

8.2 Size 2

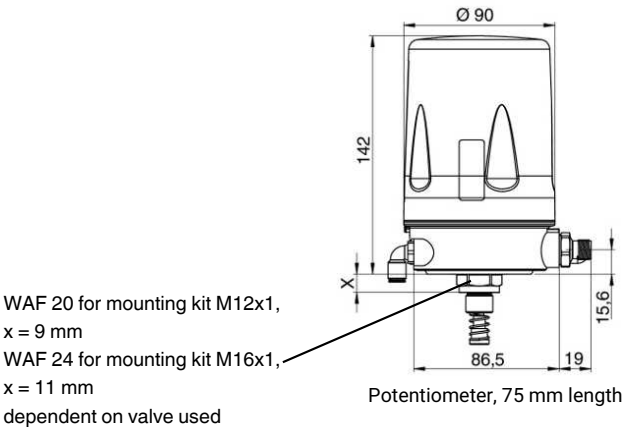

Potentiometer, 75 mm length

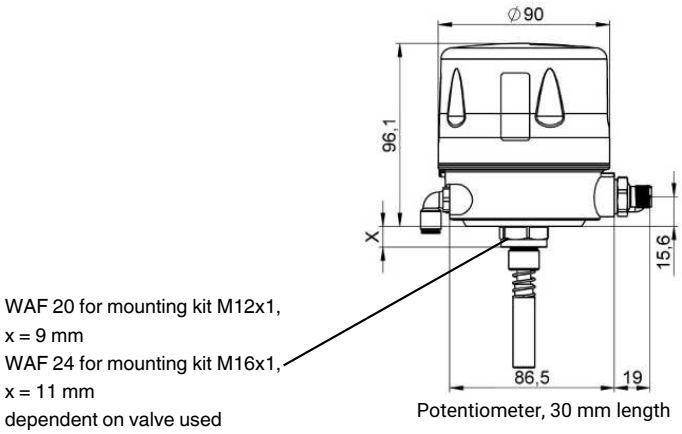

Potentiometer, 30 mm length

Dimensions in mm

9 Manufacturer's information

9.1 Delivery

- Check that all parts are present and check for any damage immediately upon receipt.

The product's performance is tested at the factory. The scope of delivery is apparent from the dispatch documents and the design from the order number.

9.2 Packaging

The product is packaged in a cardboard box which can be recycled as paper.

9.3 Transport

1. Only transport the product by suitable means. Do not drop. Handle carefully.
2. After the installation dispose of transport packaging material according to relevant local or national disposal regulations / environmental protection laws.

9.4 Storage

1. Store the product free from dust and moisture in its original packaging.
2. Avoid UV rays and direct sunlight.
3. Do not exceed the maximum storage temperature (see chapter "Technical data").
4. Do not store solvents, chemicals, acids, fuels or similar fluids in the same room as GEMÜ products and their spare parts.

10 Assembly and installation

NOTICE

- Pay attention to the information on product labels, in product documentation and EC type examination certificate.
- Connect cable carefully, do not damage individual wires.
- When connecting multiwire or finewire cables, prepare the wire ends.
- Always use suitable pinch tools for pinching wire end ferrules in order to achieve consistent quality.
- Tighten all clamping points, even the ones not being used.

1. Observe the national regulations and provisions.
2. Observe the installer provisions.
3. Protect M12 plugs against electrostatic build-up.
4. Protect M12 plugs against damage.
5. Lay cables securely and protect them from damage.
6. Differential voltage for two intrinsically safe electric circuits: maximum 30 V.
7. Connect open wire ends in a junction box with protection class IP20 and higher or outside the EX area.

10.1 Mounting kit assembly

Item	Name	Item	Name
1	Spindle	7	Flange plate
2	Spring	8	Screws
3	Operating bush	9	Pressure disc*
4	Distance piece	10	O-ring*
5	O-ring	11	O-ring*
6	Adapter		

* Included depending on version.

⚠ CAUTION

Pretensioned spring!

► Damage to the device.

- Slowly release the tension in the spring.

⚠ CAUTION

Do not scratch the spindle!

► A damaged spindle surface may cause failure of the travel sensor.

1. Pull out the spindle**1**.

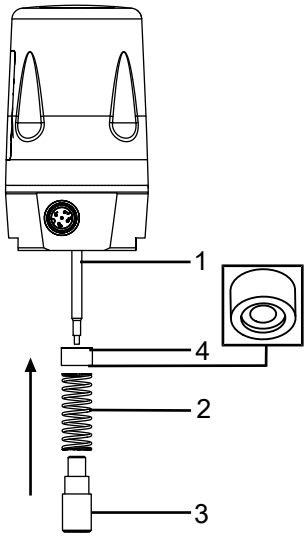

2. Align the indentation of the distance piece **4** to the spring and push it over the spindle **1** using the spring **2** and fix it in place using the operating bush **3**.

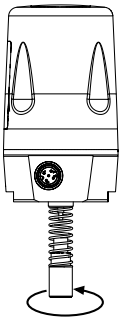

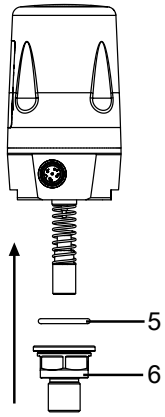

3. Tighten the operating bush **3** by turning it clockwise.

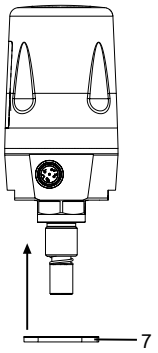

4. Affix the O-ring **5** and the adapter **6**.

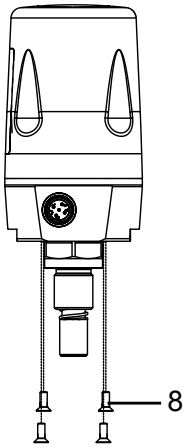

5. Attach the flange plate **7**

6. Screw the flange plate on tight using screws **8** (1–1.5 Nm).

- Push in the spindle until it pushes against the spring and then slowly release the pressure on the spring.

NOTICE

- ► For some valves (e.g. GEMÜ 650 and GEMÜ 687) it is necessary to fit a pressure disc between the threaded adapter and the actuator head. This is included in the required mounting kits, sometimes with an additional O-ring (only GEMÜ 650 with normally open and double-acting control function – code 2+3).
- ► If the pressure disc does not have a groove for a seal, this will already be inserted in the groove provided at the adapter opening of the actuator head (e.g. GEMÜ 687 with normally open control function – code 2).

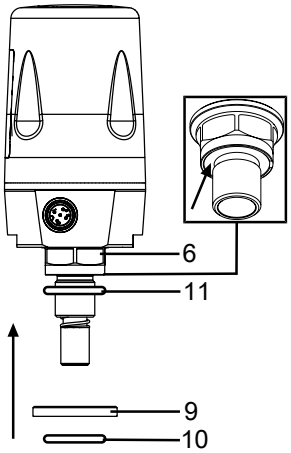

Insert the O-ring **11** (if included) into the corresponding groove on the adapter **6**.

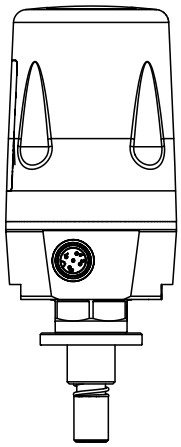

If included: Push the pressure disc **9** over the adapter **6** and insert the O-ring **10** in the intended groove of the pressure disc.

10.2 Mounting the combi switchbox on linear actuators

10.2.1 Preparations for mounting to the valve

1. Move the actuator **A** into zero position (actuator vented).
2. Remove optical position indicator **2** and / or protective cap **1** from the actuator top.

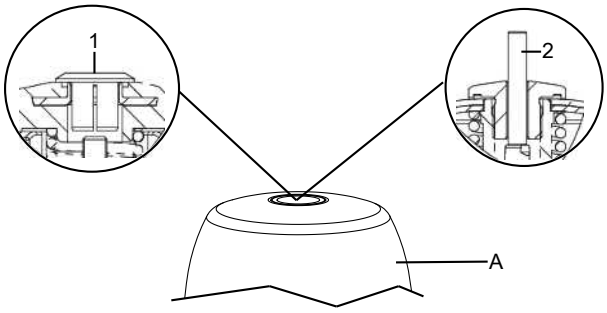

10.2.2 Assembling the adapter (linear actuator)

With some mounting kits it is necessary to install an adapter as well. This adapter is enclosed with the required mounting kits. Valves with a normally open and double acting control function (code 2+3) also include additional O-rings (1+2).

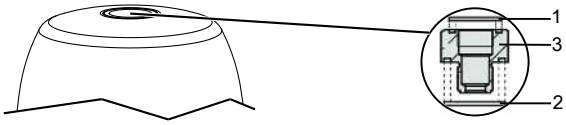

1. Move the actuator to the closed position.
2. Place O-rings **1** and **2** into adapter **3**.
3. Screw adapter **3** into the actuator opening as far as it will go and tighten.

10.2.3 Assembling the stroke limiter (linear actuator)

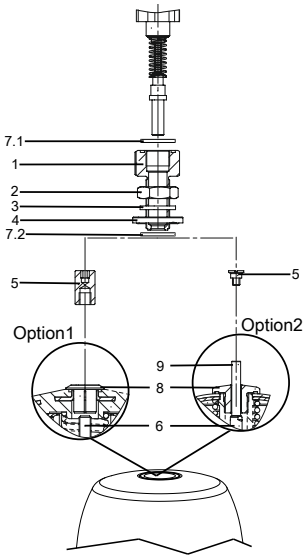

1. Screw distance piece **5** onto/ into actuator spindle **6**.
2. Move the actuator to the closed position.
3. Insert the O-ring **7.1** in the stroke limiter **1**.
4. Insert the O-ring **7.2** in the washer **4**.
5. Screw stroke limiter **1** with nut **2**, seal **3** and washer **4** into the actuator opening.
6. Set stroke limiter **1** to the required stroke.
7. Make sure that the minimum stroke is reached.
8. Secure stroke limiter **1** with nut **2**.

Key			
1	Stroke limiter	7.1 [1)] 7.2 [1)]	O-ring
2	Nut	8	Protective cap
3 [1)]	Seal	9	Position indicator
4 [1)]	Washer	10	Operating bush
5 [2)]	Distance piece	11	Spindle
6	Actuator spindle	12	Travel sensor

1) Only available for valves with the NO and DA control functions.

2) Only included in required mounting kits. The design depends on the valve.

10.2.4 Assembling and installing the combi switchbox (linear actuator)

⚠ DANGER

Danger of explosion

- ► Risk of death or severe injury.
- ● Do not use the product as a step or foothold.
- ● Prior to commissioning, ensure that the cover is fully closed and that the housing and the O-ring are not damaged.

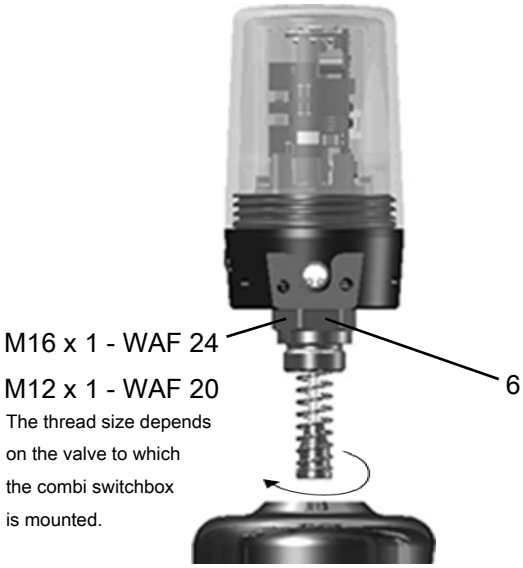

1. Move the actuator into the OPEN position.
2. Guide the product as far as it will go into the actuator opening, the adapter 3 (see “Assembling the adapter (linear actuator)“, page 16) or the stroke limiter 1 (see “Assembling the stroke limiter (linear actuator)“, page 17) and screw in clockwise against the initial spring tension.
3. Use the spanner flat of the travel sensor to tighten the product.
4. Turn the housing clockwise to align the pneumatic or electrical connections.
5. Connect the product electrically (see “Electrical connection“, page 20).
6. Connect the product pneumatically.
7. Initialize the product (see “Commissioning“, page 22).

⚠ CAUTION

Incorrect installation of the product.

- ► Damage to the housing.
- ● Only tighten the product using the spanner flats provided for this purpose.

NOTICE

Wrong mounting kit

- ► If no initial spring tension can be felt, it may be the case that the wrong mounting kit with too short an operating bush has been used.
- ► If the spring locks and the positioner cannot be correctly mounted on the valve, it may be the case that the wrong mounting kit with too long an operating bush has been used or that a required adapter has not been used.
- ● In both cases, check that the mounting kit parts are being used correctly and in their entirety.

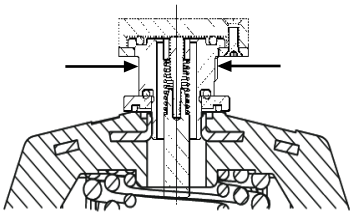

8. The product with mounting kit is fully assembled.

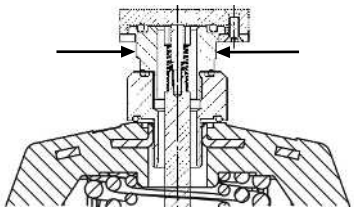

9. The product with mounting kit and adapter is fully assembled.

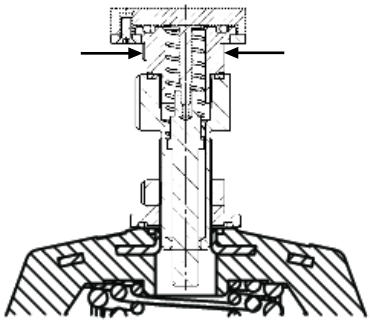

10. The product with mounting kit and stroke limiter is fully assembled.

10.3 Mounting the combi switchbox on quarter turn actuators

10.3.1 Contents of PTAZ mounting kit for quarter turn actuator

The PTAZ mounting kit contains the following items:

Item
PTAZ adapter
PTAZ mounting kit
Flange plate
O-ring
Screws (4x)
Adapter (M16x1)
Operating bush
Compression spring

10.3.2 Preparations for installation of the valve (quarter turn actuator)

1. Move the actuator **A** into zero position (actuator vented).

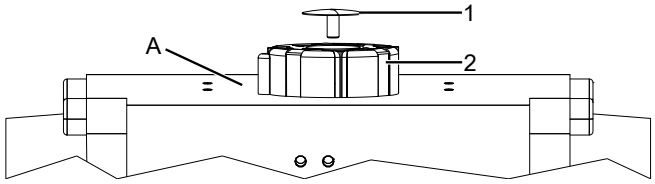

2. Remove the screw **1** from the trigger cam **2**.

10.3.3 Assembling and installing the combi switchbox (quarter turn actuator)

⚠ CAUTION

Incorrect installation of the product.

- ► Damage to the housing.
- ● Only tighten the product using the spanner flats provided for this purpose.

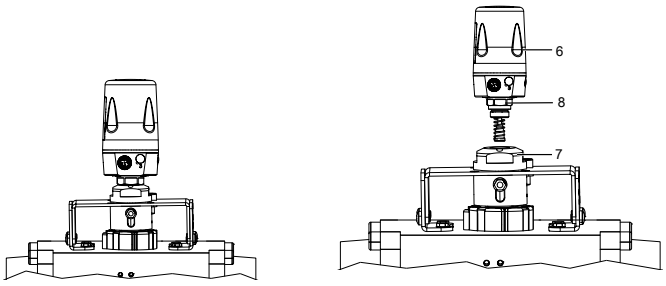

1. Screw the product **6** onto the adapter **7**.
2. Use the spanner flat **8** (WAF 27) of the travel sensor to tighten the product.
3. Turn the housing clockwise to align the pneumatic or electrical connections.
4. Connect the product electrically (see “Electrical connection“, page 20).
5. Connect the product pneumatically.
6. Initialize the product (see “Commissioning“, page 22).

11 Pneumatic connection

⚠ CAUTION

Reduction of the flow at the vent connection 3

- ► Increased overpressure in the upper part of the housing
- Do not operate vent connection 3 with chokes, filters or similar.
- Ensure that vent lines are always depressurised.
- Install vent lines free of tension and kinks.

11.1 Size 1, standard, single acting

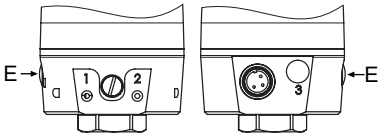

Connection	Designation	Connection size
1	Air supply connection	M5
2	Working connection for process valve	M5
3	Venting connection with integrated check valve	M6 x 0,75 [1)]
E	Housing ventilation with integrated check valve	M6 x 0.75

1) only relevant for exhaust air duct and/or increase of protection class

11.2 Size 1, standard, double acting

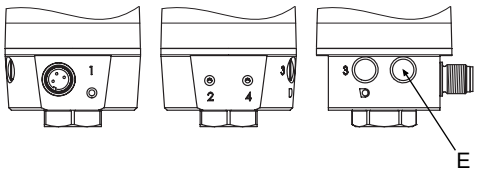

Connection	Designation	Connection size
1	Air supply connection	M5
2	Working connection for process valve	M5
3	Venting connection with integrated check valve	M6 x 0,75 [1)]
4	Working connection for process valve	M5
E	Housing ventilation with integrated check valve	M6 x 0.75

1) only relevant for exhaust air duct and/or increase of protection class

11.3 Size 1, compact version

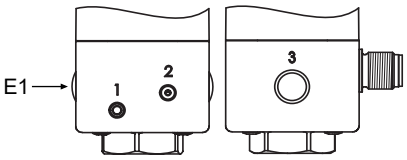

Connection	Designation	Connection size
1	Air supply connection	M5
2	Working connection for process valve	M5
3	Venting connection with integrated check valve	M6 x 0,75 [1)]
E1	Housing ventilation with integrated check valve	M6 x 0.75

1) only relevant for exhaust air duct and/or increase of protection class

11.4 Size 2, standard, single acting

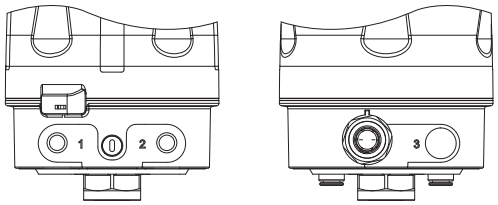

Connection	Designation	Connection size
1	Air supply connection	G 1/8
2	Working connection for process valve	G 1/8
3	Venting connection with silencer (integrated housing ventilation)	G 1/8 [1)]

1) only relevant for exhaust air duct and/or increase of protection class

11.5 Size 2, standard, double acting (only available for 75 mm version)

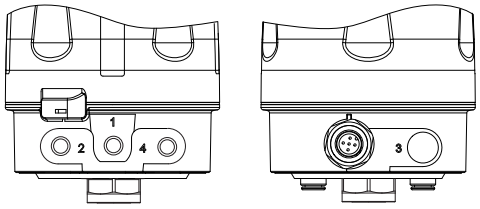

Connection	Designation	Connection size
1	Air supply connection	G 1/8
2	Working connection for process valve	G 1/8
3	Venting connection with silencer (integrated housing ventilation)	G 1/8 [1)]

Connec-tion	Designation	Connection size
4	Working connection for process valve	G 1/8

1) only relevant for exhaust air duct and/or increase of protection class

11.6 Information for use in damp conditions

The following information is intended to help when installing and operating the product in damp conditions.

1. Cables and pipework must be laid so that condensate or rain water that remains on the pipework/cables cannot enter the screw fittings of the product's M12 plugs.
2. Check that all cable glands of the M12 plugs and the fittings are mechanically secured.

12 Electrical connection

NOTICE

Risk: Electrostatic discharge

- ► Destruction of electronic components
- ● When mounting the potentiometer, take the necessary ESD safety precautions.

⚠ DANGER

Danger of explosion

- ► Risk of severe injury or death.
- ● Do not connect or disconnect the device until the power has been switched off or the area has been classified as non-hazardous.
- ● The standard version of the product (without special function X or Y) must not be used in potentially explosive zones.
- ● Danger from sparking. Never disconnect the connection cables when live.

NOTICE

Risk of cable break

- ► Overtightening can result in damage to the internal cables.
- ● Turn electrical connections once by max. 360°.

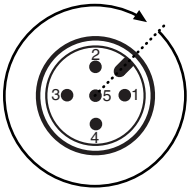

NOTICE

Risk of cable break

- ► Overtightening can result in damage to the internal cables.
- ● Turn electrical connections once by max. 360°.

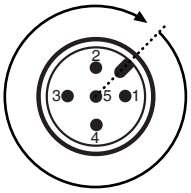

12.1 Electrical connection

1. Connect the product in accordance with the pin assignment.

For electrical connection, we recommend the M12 connectors for EX areas from IFM, series EVCxxA.

The M12 plugs may only be assembled, connected and commissioned by trained personnel. The trained personnel must have expertise in types of ignition protection, and regulations and provisions for operating media in EX areas.

2. Securely lay the connection cables or ensure sufficient tension relief.
3. Refer to the technical data and cable gland documentation for details of the wire cross sections.
4. Protect the product and the cables from damage.
5. Only clean the product with an anti-static or damp cloth.
6. Only operate the product when it is fully assembled.

12.2 Potential equalization – special function X and Y

Connecting the potential equalization device

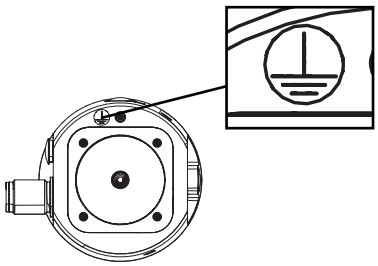

1. Use a screw M4x6 to attach the potential equalization device to the electrical position indicator.
   ⇨ Potential equalization for metal housings in potentially explosive areas: Minimum 4 mm².
2. Secure the connection against working itself loose.

12.3 24 V, ordering option Fieldbus, code 000

12.3.1 Pin assignment

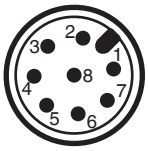

Pin	Signal name
1	U, 24 V DC, supply voltage
2	24 V DC, Open end position output
3	U, GND
4	24 V DC, Closed end position output
5	24 V DC, programming input
6	24 V DC, control input
7	24 V DC, error output
8	n.c.

Pin 5 and pin 6 are highly active. If not used, connect to GND or leave open.
The following errors are indicated via pin 7 (error output): Sensor error, pneumatic error, programming error, internal error

12.3.2 Inputs (pin 5, 6)

Input impedance

Min. 27 kΩ

Input voltage

max. 30 V DC

High level

≥ 18 V DC

Low level

≤ 5 V DC

12.3.3 Outputs (pin 2, 4, 7)

Internal wiring

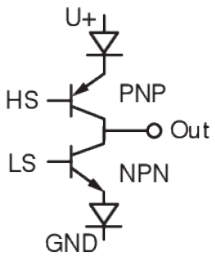

Push-Pull

Max. switching current

± 100 mA

Max. voltage drop Vdrop

3 V DC at 100 mA

Switching voltage

$+U_v - V_{drop}$ push high
$-U_v + V_{drop}$ pull low

12.4 IO-Link, ordering option Fieldbus, code IOL

Observe the safety information and general information in the **"Electrical connection"** section.

12.4.1 Pin assignment

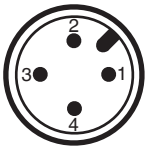

Pin	Signal name
1	U, 24 V DC, supply voltage
2	n.c.
3	U, GND
4	C/Q IO-Link
5	-

12.5 AS-Interface, ordering option Fieldbus, code A2, A3, A4

Observe the safety information and general information in the **"Electrical connection"** section.

12.5.1 Pin assignment

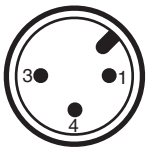

Pin	Signal name
1	AS-Interface +
2	-
3	AS-Interface -
4	n.c.
5	-

Carry out potential equalisation via pre-assembled earthing kit.
Connect yellow/green stranded wire H07 V-K 4.0 on site.

12.5.2 Potential equalization and electrical connection

The potential equalisation can be established using the following methods:

- Pre-assembled earthing kit for the on-site wiring of the earth via a stranded wire, yellow/green H07 V-K 4.0
- Conductive connection via the mechanically coupled valve fitting to the system earth

The maximum permissible resistance of the potential equalisation connection is defined as R ≤ 100 Ω. During the plant-specific maintenance cycle, the potential equalisation connection must be checked to ensure that it has been connected correctly and that the maximum resistance has not been exceeded.

Procedure

1. Establish the potential equalisation using one of the specified methods.
2. Check the maximum permissible resistance value and check the connections if this is exceeded.
3. Include the check of the potential equalisation in the maintenance cycle.
4. Connect the product in accordance with the pin assignment.

12.6 DeviceNet, ordering option Fieldbus, code DN

Observe the safety information and general information in the **"Electrical connection"** section.

12.6.1 Net topology – DeviceNet system

To avoid malfunction the trunk cable is fitted with resistors on both sides. The drop cables do not require bus ends.

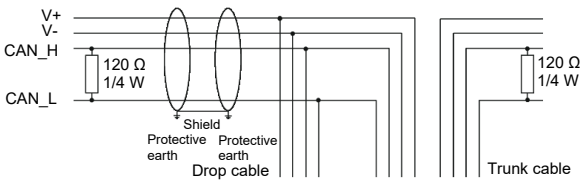

Maximum cable length

Baud rate [kBaud]	Trunk cable		Drop cable	
	Thick cable	Thin cable	Max. cable length per drop cable	Max. drop cable accumulated length
125	500 m	100 m	6 m	156 m
250	250 m	100 m	6 m	78 m
500	100 m	100 m	6 m	39 m

12.6.2 Pin assignment

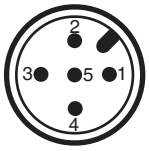

Pin	Signal name
1	Shield
2	V+
3	V-
4	CAN_H
5	CAN_L

13 Commissioning

⚠ CAUTION

Hazardous situation

- ► Risk of injury or damage possible.
- For correct commissioning, the product must be calibrated to the process valve by means of the initialization process.
- During this commissioning, the valve is automatically opened and closed several times. It must therefore be ensured in advance that this does not lead to a dangerous situation.

NOTICE

Incorrect initialization

- Always carry out initialization without operating medium pressure on the process valve. Carry out initialization of the process valve in neutral position (NO/NC).

NOTICE

- For delivery of the product assembled on a valve at the factory, the complete construction is already ready for operation at a control pressure of 5.5 to 6 bar without operating pressure. A reinitialization is recommended if the plant is operated with a different control pressure or if the mechanical end positions have been changed (e.g. seal replacement on the valve or actuator replacement). The initialization is retained even in the event of voltage cutoff.

NOTICE

- For delivery of the product without factory setting (e.g. for delivery without valve) initialization must be carried out once for correct operation. This initialization must be repeated every time that the process valve is changed (e.g. seal replacement or actuator replacement).

1. Connect the connection cable tension-free and without any bends or knots.
2. Switch on supply voltage.
3. POWER LED on.
4. Use suitable connectors.
5. Connect the control medium lines tension-free and without any bends or knots.
6. Connect the product pneumatically to the process valve.
7. Connect the pneumatic tubes and activate the pneumatic control air supply of max. 7 or 9 bar.
8. Carry out initialisation on-site or via communication interface.

NOTICE

Initialization is active for an unusually long time

► For actuators with a large air volume (filling volume), in some circumstances it can take several minutes until initialization can be completed. Initialization is only unsuccessful if an error message appears with LED signalling.

13.1 Initialization of end positions

The end positions must be programmed under the following conditions:

- Retrofitting an electrical position indicator
- Replacing the actuator
- Replacing the diaphragm

If electrical position indicators have been fitted to the process valve at the factory, the end positions will already have been programmed.

The end positions can be programmed as follows:

- On-site programming
- Programming input (pin 5)
- Communication interface
  When programming via the communication interface, automatic programming is recommended.

13.1.1 On-site initialization of the end positions (available for all electrical versions)

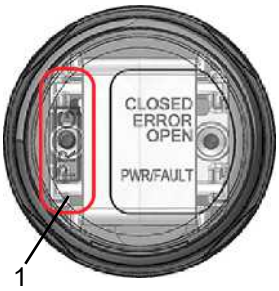

NOTICE

► If the magnet is held against the housing cover for too long, the programming mode is left and the previous state is restored.

1. Connect supply voltage.
2. Briefly (>100 ms) hold a magnet (e.g. 1242000ZMA) to the position marked PROG 1 on the housing cover.

⇨ The OPEN and CLOSED LEDs flash alternately.

3. Remove magnet.
   ⇨ OPEN and CLOSED LEDs flash slower alternately.
   ⇨ High visibility LED flashes alternately green / orange.
   ⇨ The process valve moves automatically 2 times each to position OPEN and CLOSED.
4. Programming mode is automatically terminated if the valve does not move for 5 seconds.

⇨ The end positions are set.

⇨ The OPEN, CLOSED and high visibility LEDs light up depending on the product (see “LED displays“, page 6).

13.1.2 Initialization of the end positions via IO-Link

1. Select automatic programming mode (parameter data "Programming mode").
2. Briefly (>100 ms) activate programming mode (process data "Programming mode").
   ⇨ OPEN and CLOSED LEDs flash alternately.
   ⇨ High visibility LED flashes alternately green / orange.
   ⇨ The process valve moves automatically 2 times each to position OPEN and CLOSED.
3. Programming mode is automatically terminated if the valve does not move for 5 seconds.

⇨ The end positions are set.

13.1.3 Initialization of end positions via DeviceNet

Automatic programming mode:

1. Briefly (>100 ms) set output bit 6 = 1. (automatic programming mode)
2. Set output bit 6 = 0.
   ⇨ The process valve moves automatically 2 times each to position OPEN and CLOSED.
3. Programming mode is automatically terminated if the valve does not move for 5 seconds.

⇨ The end positions are set.

Manual programming mode:

4. Set output bit 5 =1. (manual programming mode)
5. Open valve until end position is reached.
6. Close valve until end position is reached.
7. Set output bit 5 = 0. (The product is in normal operation)

⇨ The end positions are set.

13.1.4 Initialization of end positions via ASI

13.1.4.1 A2 version

Automatic programming mode:

1. Set DO3 = 1. (automatic programming)
2. Briefly (>100 ms) set DO2 = 1. (The product is in programming mode)
3. Set DO3 = 0.
4. The product moves automatically in end positions OPEN and CLOSED.
5. The product automatically goes into normal operation.
6. Programming mode is automatically terminated if the valve does not move for 5 seconds.

⇨ The end positions are set.

⇨ The OPEN, CLOSED and high visibility LEDs light up depending on the product (see “LED displays“, page 6).

Manual programming mode:

7. Set DO3 = 0. (manual programming)
8. Set DO2 = 1. (The product is in programming mode)
9. Open valve until end position is reached.
10. Close valve until end position is reached.
11. Set DO2 = 0. (The product is in normal operation)

⇨ The end positions are set.

⇨ The OPEN, CLOSED and high visibility LEDs light up depending on the product (see “LED displays“, page 6).

13.1.4.2 A3 version

Automatic programming mode:

1. Set DO1 = 1. (automatic programming)
2. Briefly (>100 ms) set DO2 = 1. (The product is in programming mode)
3. The product moves automatically in end positions OPEN and CLOSED.
4. Programming mode is automatically terminated if the valve does not move for 5 seconds.

⇨ The end positions are set.

⇨ The OPEN, CLOSED and high visibility LEDs light up depending on the product (see “LED displays“, page 6).

Manual programming mode:

5. Set DO1 = 0. (manual programming)
6. Set DO2 = 1. (The product is in programming mode)
7. Open valve until end position is reached.
8. Close valve until end position is reached.
9. Set DO2 = 0. (electrical position indicator in normal operation)

⇨ The end positions are set.

⇨ The OPEN, CLOSED and high visibility LEDs light up depending on the product (see “LED displays“, page 6).

13.1.4.3 A4 version

Automatic programming mode:

1. Briefly (>100 ms) set DO2 = 1. (The product is in programming mode)
2. Open valve until end position is reached.
3. Close valve until end position is reached.
4. Programming mode is automatically terminated if the valve does not move for 5 seconds.

⇨ The end positions are set.

⇨ The OPEN, CLOSED and high visibility LEDs light up depending on the product (see “LED displays“, page 6).

Manual programming mode:

5. Set DO1 = 1. (manual programming)
6. Set DO2 = 1. (The product is in programming mode)
7. Open valve until end position is reached.
8. Close valve until end position is reached.
9. Set DO2 = 0. (The product is in normal operation)

⇨ The end positions are set.

⇨ The OPEN, CLOSED and high visibility LEDs light up depending on the product (see “LED displays“, page 6).

13.1.5 Initialization of end positions via programming input (pin 5) 24 V version

1. Connect supply voltage.
2. Briefly connect a 24 V DC signal (>100 ms) to programming input (pin 5).
   ⇨ OPEN and CLOSED LEDs flash alternately.
   ⇨ High visibility LED flashes alternately green / orange.
   ⇨ The process valve moves automatically 2 times each to position OPEN and CLOSED.
3. Open valve until end position is reached.
4. Close valve until end position is reached.
5. Programming mode is automatically terminated if the valve does not move for 5 seconds.

⇨ The end positions are set.

14 Specific data - IO-Link

Physics: Physics 2 (3-wire design)

Port configuration: Port type A

Transmission rate: 38400 baud

Frame type in Operate: 2.5

Min. cycle time: 2.3 ms

Vendor-ID: 401

Device-ID: 424201

Product-ID: 4242 IO-LINK

ISDU support: yes

SIO operation: yes

IO-Link specification:

Size 1	Size 2
V1.1	V1.1 when using IODD 1.1 [1)]

1) When using IODD 1.0.1 the device works in accordance with IO-Link specification V1.0 (compatibility mode)

Note for IO-Link: IODD files can be downloaded via the hyperlinks https://ioddfinder.io-link.com/%20oder%20www.gemu-group.com, https://ioddfinder.io-link.com or www.gemu-group.com.

14.1 Process data

Device → Master

Name	Bit	Values
Valve position Open	0	0 → Process valve not in Open position
		1 → Process valve in Open position
Valve position Close	1	0 → Process valve not in Closed position
		1 → Process valve in Closed position
Programming mode	2	0 → Normal operation
		1 → Programming mode

Master → Device

Name	Bit	Values
Pneumatic outlet (single acting valve)	0	0 → Pneumatic outlet 2 vented
		1 → Pneumatic outlet 2 pressurized
Pneumatic outlet (double acting valve)	0	0 → Pneumatic outlet 2 vented, pneumatic outlet 4 [1)] pressurized
		1 → Pneumatic outlet 2 pressurized, pneumatic outlet 4 [1)] vented
Programming mode	1	0 → Normal operation
		1 → Programming mode
Locate	2	0 → Off
		1 → On

1) Activation of outlet 4, only for double acting function (code 02)

14.2 Parameter overview

NOTICE

► All IO-Link parameters that contain sub-indexes can also be addressed in bundles via sub-index 0.

Index [Hex]	Sub-index	Access rights	Parameters	Length	Data type	Default settings	Setting options
0x10	0	ro	Vendor Name	6 byte	StringT	GEMUE	-
0x12	0	ro	Product Name	13 byte	StringT	4242 IO-Link	-
0x13	0	ro	Product ID	8 byte	StringT	4242 IO-LINK	-
0x15	0	ro	Serial number	9 byte	StringT	0–4294967296	-
0x16	0	ro	Hardware Revision	8 byte	StringT	Rev. xx	-
0x17	0	ro	Firmware Revision	10 byte	StringT	V x.x.x.x	-
0x50	1	rw	Inversion of LED colours	1 bit	Boolean	0	0 = standard 1 = inversed
	2	rw	Inversion of feedback signals	1 bit	Boolean	0	0 = standard 1 = inversed
	3	rw	Function of high visibility	3 bit	UIntegerT	3	0 = off 1 = open/closed (33%) 2 = open/closed (66%) 3 = open/closed (100%)
	4	rw	Programming mode	1 bit	Boolean	0	0 = automatic 1 = manual
	5	rw	On site programming	1 bit	Boolean	0	0 = enabled 1 = disabled
	6	rw	Inversion of outputs	1 bit	Boolean	0	0 = standard 1 = inversed
0x51	1	rw	Switch Point OPEN request	8 bit	UIntegerT	25%	3%–97%
	2	rw	Switch Point CLOSED request	8 bit	UIntegerT	12%	3%–97%
	3	ro	Switch Point OPEN real	8 bit	UIntegerT	25%	Display of values 3%–97%
	4	ro	Switch Point CLOSED real	8 bit	UIntegerT	12%	Display of values 3%–97%
0x52	1	rw	Alarm Stroke reduction OPEN	4 bit	UIntegerT	1	0 = disabled 1 = 25% of Switch Point 2 = 50% of Switch Point 3 = 75% of Switch Point
	2	rw	Alarm Stroke reduction CLOSED	4 bit	UIntegerT	1	0 = disabled 1 = 25% of Switch Point 2 = 50% of Switch Point 3 = 75% of Switch Point
	3	rw	Alarm opening time	8 bit	UIntegerT	0	0 = disabled 1–255 s
	4	rw	Alarm closing time	8 bit	UIntegerT	0	0 = disabled 1–255 s
	5	rw	Valve type	8 bit	UIntegerT	0	0 = unknown 1 = normally closed 2 = normally open
0x53	1	ro	Programmed position OPEN	16 bit	UIntegerT	0	Display of numerical values 0–4092

Index [Hex]	Su-bindex	Access rights	Parameters	Length	Data type	Default settings	Setting options
	2	ro	Programmed position CLOSED	16 bit	UIntegerT	0	
	3	ro	Programmed position STROKE	16 bit	UIntegerT	0	
0x54	1	ro	Last position OPEN	16 bit	UIntegerT	0	
	2	ro	Last position CLOSED	16 bit	UIntegerT	0	
	3	ro	Last position STROKE	16 bit	UIntegerT	0	
0x56	1	rw	Valve cycles user	24 bit	UIntegerT	0	Resettable to 0, display of numerical values 0–16777215
	2	ro	Valve cycles total	24 bit	UIntegerT	0	Display of numerical values 0–16777215
0x57	1	ro	Counter Powerfail	16 bit	UIntegerT	0	Display of numerical values 0–65535
	2	ro	Counter Power on	16 bit	UIntegerT	0	
	3	ro	Counter Programming	16 bit	UIntegerT	0	
	4	ro	Counter Sensor calibration	16 bit	UIntegerT	0	
	5	ro	Counter Prog error no stroke	16 bit	UIntegerT	0	
	6	ro	Counter Prog error less stroke	16 bit	UIntegerT	0	
	7	ro	Counter Prog error after sensor error	16 bit	UIntegerT	0	
	8	ro	Counter Pneumatic fault OPEN	16 bit	UIntegerT	0	
	9	ro	Counter Pneumatic fault CLOSED	16 bit	UIntegerT	0	
	10	ro	Counter Pneumatic fault middle position	16 bit	UIntegerT	0	
	11	ro	Counter Sensor error OPEN	16 bit	UIntegerT	0	
	12	ro	Counter Sensor error CLOSED	16 bit	UIntegerT	0	
	16	ro	Counter Over temperature	16 bit	UIntegerT	0	
0x60	0	ro	Actual AD-value	16 bit	UIntegerT	0	Display of numerical values 0–4092

14.3 Description of parameter values

Inversion of LED colours

Inversion of the LED colours for the OPEN/CLOSED feedback (see “Status LEDs“, page 6).

Inversion of feedback signals

Inversion of optical and electrical feedback for OPEN/CLOSED feedback.

Travel sensor position	Feedback	
	Standard	Inversed
Travel sensor retracted (valve spindle is up)	OPEN	CLOSED
Travel sensor extended (valve spindle is down)	CLOSED	OPEN

Function of high visibility position indicator

The function of the high visibility position indicator can be set in four steps. The setting is used to change the light intensity.

Setting	Function
Step 1	High visibility position indicator off
Step 2	High visibility position indicator on (100%)
Step 3	High visibility position indicator on (33%)
Step 4	High visibility position indicator on (66%)

Error messages and location function are not affected by the setting and always remain active (100%).

Programming mode

Selection of programming mode (see “Initialization of the end positions via IO-Link“, page 23).

Local programming

On-site programming can be disabled to prevent unauthorized activation.

Setting	Programming mode	Status
On-site programming enabled	On-site programming	enabled
	Remote programming	enabled
On-site programming disabled	On-site programming	disabled
	Remote programming	enabled

Threshold open request

Desired switch point setting for OPEN feedback as a percentage of the programmed stroke.

Example: Switch point OPEN 25%, switch point CLOSED 12%

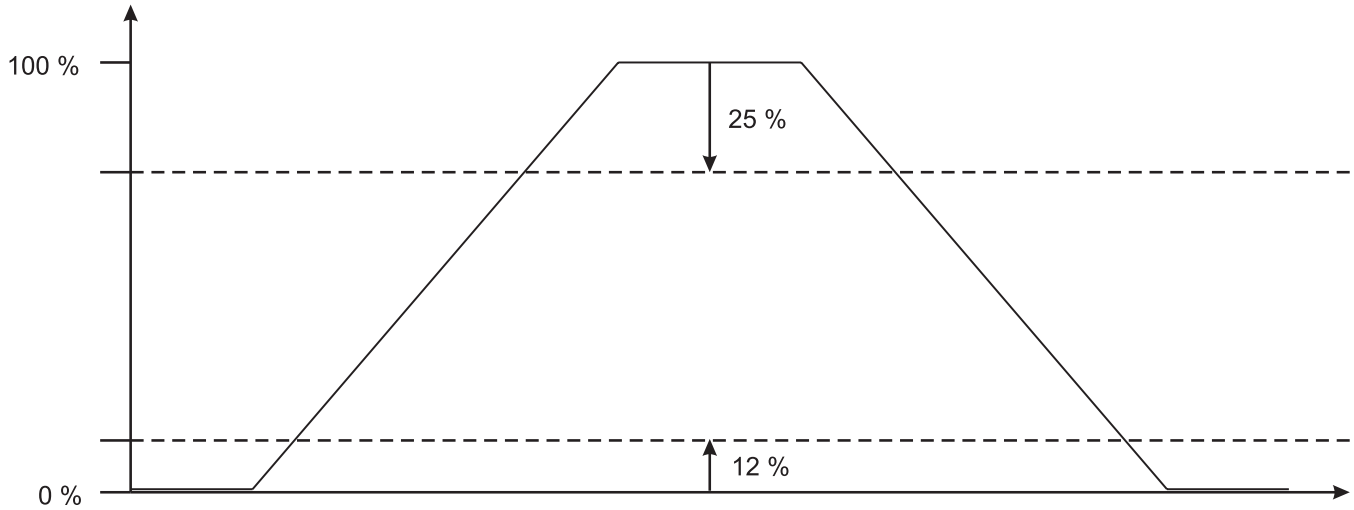

These tolerances enable operational changes e.g. compensation of diaphragm swelling during sterilization to ensure reliable end position feedback.

In the event of overlapping of the set value for CLOSED feedback or if the minimum possible switch point is overstepped, the maximum possible value is used. The value used can be read out from the parameter "Threshold open real".

Threshold open real

Value actually used for the switch point for OPEN feedback.

Threshold closed request

Corresponds to "Threshold open request" but for CLOSED feedback.

Threshold closed real

Corresponds to "Threshold open real" but for CLOSED feedback.

Alarm stroke reduction open

Setting for the alarm "Stroke reduction" for OPEN position.

The alarm is triggered if the valve stroke changes beyond the set tolerance in the OPEN position. The alarm is reset automatically as soon as the value returns to within the valid tolerance range. End position feedback takes place independently of the warning as long as the valve is within the set tolerance range for feedback (threshold). If the end position changes, a warning is thus triggered first before the end position feedback is lost.

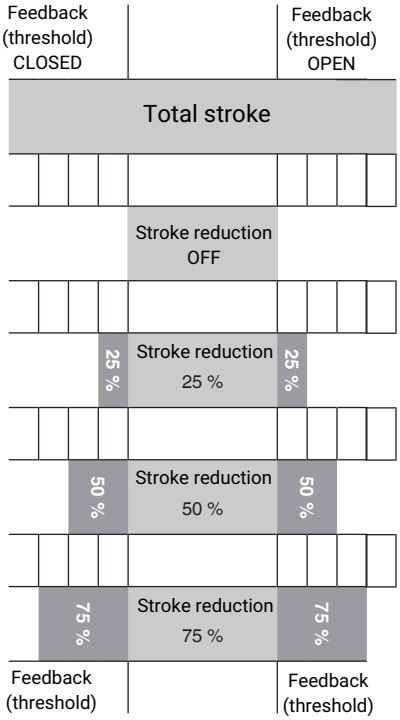

The setting is a percentage of the set switch point tolerance (threshold).

Setting	Function
Off	Warning deactivated
25%	Warning becomes active 25% before loss of end position feedback
50%	Warning becomes active 50% before loss of end position feedback
75%	Warning becomes active 75% before loss of end position feedback

The delay time before the warning occurs corresponds to the time of parameter **Alarm opening time**.

NOTICE

► If the parameter **Alarm opening time** is deactivated (setting 0), the alarm **Stroke reduction** is deactivated.

Alarm stroke reduction closed

Corresponds to **Alarm stroke reduction open** but for CLOSED position.

The delay time before the warning occurs corresponds to the time of parameter **Alarm closing time**.

NOTICE

► If the parameter **Alarm closing time** is deactivated (setting 0), the alarm **Stroke reduction** is deactivated.

Alarm opening time

Delay time for pneumatic error OPEN.

If the time between activation of the combi switchbox and reaching of the valve end position exceeds the set delay time, a pneumatic fault is output. After automatic programming is performed, the value is automatically set to 2x the measured operating time.

NOTICE

- ► The pneumatic fault is only active after automatic end position programming has been carried out.
- ► After manual end position programming, the pneumatic fault is deactivated.

Alarm closing time

Delay time for pneumatic error CLOSED.

If the time between activation of the combi switchbox and reaching of the valve end position exceeds the set delay time, a pneumatic fault is output. After automatic programming is performed, the value is automatically set to 2x the measured operating time.

NOTICE

- ► The pneumatic fault is only active after automatic end position programming has been carried out.
- ► After manual end position programming, the pneumatic fault is deactivated.

Programmed position open

AD value of the OPEN position of the last correctly executed end position programming.

Programmed position closed

AD value of the CLOSED position of the last correctly executed end position programming.

Programmed stroke

Determined stroke of linear actuator during last correctly executed end position programming (in AD values). The change in valve stroke can be calculated in conjunction with the parameter "Last stroke".

Last position open

AD value of the last approached OPEN position.

Last position closed

AD value of the last approached CLOSED position.

Last stroke

Determined stroke of linear actuator during last completed switching cycle (in AD values). The change in valve stroke can be calculated in conjunction with the parameter **Programmed stroke**.

Valve cycles user

Customer-adjustable switching cycle counter.

Counts the valid switching cycles.

A switching cycle is valid if the valve travels from one defined end position to the other defined end position and returns to the original end position. If an end position is not reached, the switching cycle is not valid and is not counted.

Valve cycles total

Factory-set total switching cycle counter (cannot be reset).

Counts the valid switching cycles.

A switching cycle is valid if the valve travels from one defined end position to the other defined end position and returns to the original end position. If an end position is not reached, the switching cycle is not valid and is not counted.

Counter Powerfail

Power failure counter.

Counter Power on

Power on counter.

Counter Programming
Executed end position programming processes counter.

Counter Sensor calibration
Executed travel sensor calibrations counter.

Counter Prog error no stroke
Programming error counter/no stroke.

Counter Prog error less stroke
Programming error counter/stroke < min. stroke.

Counter Prog error after sensor error
Programming error counter/after sensor error.

Counter Pneumatic fault open
Counter Pneumatic fault/OPEN position.

Counter Pneumatic fault closed
Counter Pneumatic fault/CLOSED position.

Counter Pneumatic fault middle position
Counter Pneumatic fault/intermediate position.

Counter Sensor error open
Sensor error counter/OPEN position.

Counter Sensor error closed
Sensor error counter/CLOSED position.

Counter over temperature
Overtemperature counter.

Reset to default
Reset to default settings.

Reset travel sensor
Reset travel sensor calibration.

Actual AD-value
Current value of AD converter.

14.4 Events

Event	Mode	Type	Code
Internal error	Appear/Disappear	Error	0x8CA2
Sensor error in position OPEN	Appear/Disappear	Error	0x8CA4
Sensor error in position CLOSED	Appear/Disappear	Error	0x8CA5
Programming error with no stroke	Appear/Disappear	Error	0x8CA6
Programming error with to less stroke	Appear/Disappear	Error	0x8CA7
Programming error after sensor error	Appear/Disappear	Error	0x8CA8
Not calibrated	Appear/Disappear	Error	0x8CA9
Pneumatic error in position OPEN	Appear/Disappear	Warning	0x8CB0
Pneumatic error in position CLOSED	Appear/Disappear	Warning	0x8CB1
Pneumatic error between position	Appear/Disappear	Warning	0x8CB2

Event	Mode	Type	Code
Stroke reduction OPEN	Appear/Disappear	Warning	0x8CB5
Stroke reduction CLOSED	Appear/Disappear	Warning	0x8CB6
Parameter value out of Range	Single Shot	Notification	0x8DE0
Parameter value changed	Single Shot	Notification	0x8DE1

15 Specific data - AS-Interface

	A2 version	A3 version	A4 version
AS-Interface specification	3.0; max. 31 slaves	3.0; max. 62 slaves	3.0; max. 62 slaves
AS-Interface profile	S 7.F.E (4I/4O)	S 7.A.E (4I/3O)	S 7.A.A (8I/8O)
I/O configuration	7	7	7
ID code	F	A	A
ID2 code	E	E	A
AS-Interface approval	Size 1: AS-Interface certificate No. 96001 Size 2: AS-Interface certificate No. 125601		

15.1 Inputs

Bit		Default	Function	Version			Logic
				A2	A3	A4	
DI0	0	Indication of OPEN position		X	X	X	0 = process valve not in OPEN position 1 = process valve in OPEN position
DI1	0	Indication of CLOSED position		X	X	X	0 = process valve not in CLOSED position 1 = process valve in CLOSED position
DI2	0	Indication of operating mode		X	X	X	0 = normal operation 1 = programming mode
DI3	0	Error 2		X	X	X	see error analysis
DI4	0	Error 3		-	-	X	
DI5	0	Error 4		-	-	X	
DI6, DI7	not used			-	-	X	
PF	0	Error 1		X	X	X	see error analysis

15.2 Outputs

Bit	Default	Function	Version			Logic
			A2	A3	A4	
DO0	0	Activation of pneumatic outlet 2	X	-	-	0 = pneumatic outlet 2 vented 1 = pneumatic outlet 2 pressurized
	0	Activation of pneumatic outlet 2 / 4	X	X	X	0 = pneumatic outlet 2 vented, pneumatic outlet 4 [1] pressurized 1 = pneumatic outlet 2 pressurized, pneumatic outlet 4 [1] vented
DO1	0	Activation of pneumatic outlet 4 [1] (pilot valve 2)	X	-	-	0 = pneumatic outlet 4 [1]vented 1 = pneumatic outlet 4 [1]pressurized
		not used	X	-	-	
	0	Programming mode	-	X	-	0 = manual programming 1 = automatic programming
	0		-	-	X	0 = automatic programming 1 = manual programming
DO2	0	Setting slave in programming mode	X	X	X	0 = normal operation 1 = programming mode
DO3	0	Programming mode	X	-	-	0 = manual programming 1 = automatic programming
	0	Function of high visibility position indicator	-	-	X	0 = activated 1 = deactivated
DO4	0	Inversion of feedback signals	-	-	X	0 = standard 1 = inversed
DO5	0	Inversion of LED colours	-	-	X	0 = standard 1 = inversed
DO6	0	Location function	-	-	X	0 = deactivated 1 = activated
DO7	0	On-site programming	-	-	X	0 = enabled 1 = disabled

1) Activation of outlet 4, only for double acting function (code 02)

15.3 Switch point parameters

Ordering option Fieldbus A2

Parameter				Switch point OPEN [%]	Switch point CLOSED [%]	A2
P3	P2	P1	P0			
0	0	0	0	12	6	X
0	0	0	1	6	6	X
0	0	1	0	3	6	X
0	0	1	1	25	6	X
0	1	0	0	12	3	X
0	1	0	1	6	3	X
0	1	1	0	3	3	X
0	1	1	1	25	3	X
1	0	0	0	12	25	X
1	0	0	1	25	25	X
1	0	1	0	6	25	X
1	0	1	1	3	25	X
1	1	0	0	12	12	X
1	1	0	1	6	12	X
1	1	1	0	3	12	X
1	1	1	1	25	12	X

Ordering option Fieldbus A3, A4

Parameter			Switch point OPEN [%]	Switch point CLOSED [%]	A3	A4*
P2	P1	P0				
0	0	0	12	25	X	-
0	0	1	25	25	X	X
0	1	0	6	12	X	-
0	1	1	6	6	X	-
1	0	0	12	12	X	-
1	0	1	12	6	X	-
1	1	0	25	6	X	-
1	1	1	25	12	X	X

*P0 and P1 are not used

Switch points: The data in percent refer to the programmed stroke, before each end position

15.4 Error analysis

Ordering option Fieldbus A2, A3

Error	PF (error 1)	DI3 (error 2)
Normal operation	0	0
Internal error	1	0
Programming error / Pneumatic fault	0	1
Sensor error	1	1

Ordering option Fieldbus A4

Error	PF (error 1)	DI3 (error 2)	DI4 (error 3)	DI5 (error 4)
Normal operation	0	0	0	0
Stroke reduction OPEN	0	0	0	1
Stroke reduction CLOSED	0	0	1	0
Pneumatic fault	0	0	1	1
Sensor error	1	1	0	0
Programming error	1	1	0	1
Internal error	1	1	1	0

16 Specific data - DeviceNet

16.1 General data

Communication modes: Function, Polling, Change of state, Cyclic, Bit strobe

Identity				
Class	Inst.	Attr.	Function	Value
1h	1h	1h	Vendor ID	869
		2h	Product Type	48
		3h	Product Code	4242
		4h	Rev.	2.2 [1)]
		5h	Status	Device status according to DeviceNet specifications
		6h	Series No.	Continuous serial number
		7h	Name	4242 DN combi switchbox

1) Use EDS file in accordance with revision status of the device

Note: Download EDS files from www.gemu-group.com

16.2 Net topology - DeviceNet system

To avoid malfunction the trunk cable is fitted with resistors on both sides. The drop cables do not require bus ends.

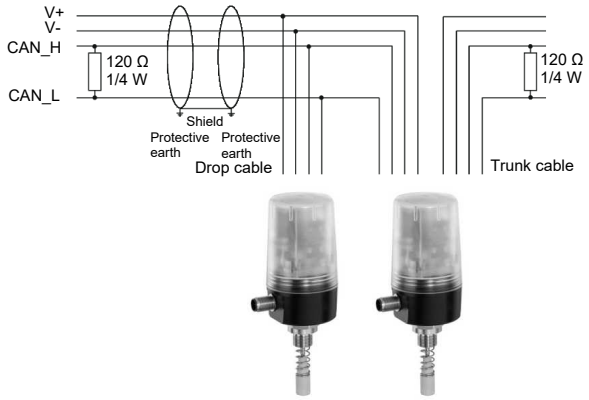

Maximum cable length

Baud rate [kBaud]	Trunk cable		Drop cable	
	Thick cable	Thin cable	Max. cable length per drop cable	Max. drop cable accumulated length
125	500 m	100 m	6 m	156 m
250	250 m	100 m	6 m	78 m
500	100 m	100 m	6 m	39 m

16.3 Inputs

Bit	Default	Designation	Function	Logic
0	0	State Valve 1	Status query pneumatic outlet 2 (pilot valve 1)	0 = pneumatic outlet 2 vented 1 = pneumatic outlet 2 pressurized
1	0	State Valve 2	Status query pneumatic outlet 4 (pilot valve 2)	0 = pneumatic outlet 4 vented 1 = pneumatic outlet 4 pressurized
2	0	Programmingmode	Feedback for operating mode	0 = normal operation 1 = programming mode
3	0	Position Closed	Feedback CLOSED position	0 = process valve not in CLOSED position 1 = process valve in CLOSED position
4	0	Position Open	Feedback OPEN position	0 = process valve not in OPEN position 1 = process valve in OPEN position
5	0	Calibrationmode	Feedback calibration mode	0 = normal operation 1 = calibration mode
6	0	Global warnings	General warning	0 = warning not active 1 = warning active
7	0	Global errors	General error	0 = error not active 1 = error active

As seen from the DeviceNet master, Class 64h, Inst. 1h, Attr. 1h

16.4 Outputs

Bit	Default	Designation	Function	Logic
0	0	active valve 1	Activation of pneumatic outlet 2 (pilot valve 1)	0 = pneumatic outlet 2 vented 1 = pneumatic outlet 2 pressurized
1	0	active valve 2	Activation of pneumatic outlet 4 [1] (pilot valve 2)	0 = pneumatic outlet 4 [1]vented 1 = pneumatic outlet 4 [1]pressurized
2	not used			

Bit	Default	Designation	Function	Logic
3	0	Location function	Location function	0 = location function not active 1 = location function active
4	not used			
5	0	Manual programming	Manual programming mode	0 = manual programming mode not active 1 = manual programming mode active
6	0	Automatic programming	Automatic programming mode:	0 = automatic programming mode not active 1 = automatic programming mode active
7	not used			

As seen from the DeviceNet master, Class 64h, Inst. 1h, Attr. 1h

1) Activation of outlet 4, only for double acting function (code 02)

16.5 Parameter overview

Class	Inst.	Access rights	Attr.	Parameters	Length	Data type	Default setting	Setting options
Fh	1h	Get/Set	1h	Inversion of LED colours	1 byte	Boolean	0	0 = standard 1 = inversed
Fh	2h	Get/Set	1h	Inversion of signals	1 byte	Boolean	0	0 = standard 1 = inversed
Fh	3h	Get/Set	1h	Function of high visibility	1 byte	USINT	3	0 = OFF 1 = 33% 2 = 66% 3 = 100% 4 = Closed 100%; Open OFF 5 = Closed OFF; Open 100%
Fh	4h	Get/Set	1h	On site programming	1 byte	Boolean	0	0 = enabled 1 = disabled
Fh	5h	Get/Set	1h	Switch Point OPEN request	1 byte	USINT	25	3%–97%
Fh	6h	Get	1h	Switch Point OPEN real	1 byte	USINT	0	Display of values 0%–100%
Fh	7h	Get/Set	1h	Switch Point CLOSED request	1 byte	USINT	12	3%–97%
Fh	8h	Get	1h	Switch Point CLOSED real	1 byte	USINT	0	Display of values 0%–100%
Fh	9h	Get/Set	1h	Alarm stroke reduction OPEN	1 byte	USINT	1	0 = disabled 1 = 25% 2 = 50% 3 = 75%
Fh	Ah	Get/Set	1h	Alarm stroke reduction CLOSED	1 byte	USINT	1	0 = disabled 1 = 25% 2 = 50% 3 = 75%
Fh	Bh	Get/Set	1h	Alarm opening time	1 byte	USINT	0	0–255 (0 = off)
Fh	Ch	Get/Set	1h	Alarm closing time	1 byte	USINT	0	0–255 (0 = off)
Fh	Dh	Get/Set	1h	Valve type	1 byte	USINT	0	0 = disabled 1 = valve NC 2 = valve NO
Fh	Eh	Get/Set	1h	Fail state	1 byte	USINT	0	0 1 2
Fh	Fh	Get	1h	Programmed position OPEN	2 byte	UINT	0	Display of numerical values 0–4092
Fh	10h	Get	1h	Programmed position CLOSED	2 byte	UINT	0	
Fh	11h	Get	1h	Programmed stroke	2 byte	UINT	0	
Fh	12h	Get	1h	Last position OPEN	2 byte	UINT	0	
Fh	13h	Get	1h	Last position CLOSED	2 byte	UINT	0	
Fh	14h	Get	1h	Last stroke	2 byte	UINT	0	

Class	Inst.	Access rights	Attr.	Parameters	Length	Data type	Default setting	Setting options
Fh	15h	Get	1h	Valve position	2 byte	UINT	0	
Fh	16h	Get	1h	Sensor error	1 byte	USINT	0	0 = Sensor OK 1 = Sensor error position closed 2 = Sensor error position open
Fh	17h	Get	1h	Programming error	1 byte	USINT	1	0 = Programming OK 1 = not calibrated 2 = no stroke 3 = stroke < min. stroke 4 = Sensor error position closed 5 = Sensor error position open 6 = Sensor error position closed + open
Fh	18h	Get	1h	Pneumatic error	1 byte	USINT	0	0 = Pneumatic OK 1 = Pneumatic error position closed 2 = Pneumatic error position open 3 = Pneumatic error middle position
Fh	19h	Get	1h	Internal error	1 byte	USINT	0	0 = Device OK 1 = un-valid crc-check 2 = un-valid serial number 3 = Memory error
Fh	1Ah	Get	1h	Stroke reduction warning	1 byte	USINT	0	0 = Stroke OK 1 = Stroke reduction position closed 2 = Stroke reduction position open 3 = Stroke reduction position closed + open
Fh	1Bh	Get/Set	1h	Valve cycles user	4 byte	UDINT	0	Resettable to 0, display of numerical values 0–429496729
Fh	1Ch	Get	1h	Valve cycles total	4 byte	UDINT	0	Display of numerical values 0–429496729

17 Manual override

NOTICE

► Manual override only available for "single acting" version.

NOTICE

► Control air and the minimum pressure must be available to use the manual override.

The combi switchbox has a manual override which enables manual operation of the process valve.

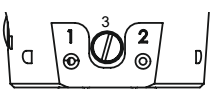

Size 1

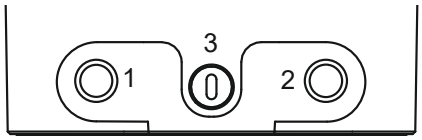

Size 2

Size 1:

Activating the manual override:

Use a flathead screwdriver (maximum slot width of 6 mm) to screw in the manual override screw **3** clockwise as far as it will go.

Deactivating the manual override:

Use a flathead screwdriver (maximum slot width of 6 mm) to unscrew the manual override screw **3** anticlockwise as far as it will go.

Size 2:

Activating the manual override:

1. Press in the manual override **3** using a flathead screwdriver (maximum slot width of 4 mm) as far as it will go and turn it 90° clockwise.

⇨ The groove is horizontal.

Deactivating the manual override:

2. Turn the manual override **3** 90° anticlockwise using a flathead screwdriver (maximum slot width of 4 mm) and release it.

⇨ The groove is vertical.

18 Troubleshooting

18.1 LED error message

Function		CLOSED	ERROR	OPEN
Programming error	No stroke	☀	●	○
	Stroke < min. stroke	☀	●	●
	After sensor error	☀	●	☀
		OPEN / CLOSED flash alternately		
Sensor error	OPEN position	○	●	☀
	CLOSED position	●	●	☀
Pneumatic fault	OPEN position	○	●	●
	CLOSED position	●	●	○
	Mid position	●	●	●
Supply voltage too low		○	●	○
Internal error		☀	●	☀
		OPEN / CLOSED flash simultaneously		

18.2 Troubleshooting

Error	Error cause	Troubleshooting
Programming error no stroke	No mounting kit available	Check the mounting kit, re-programme
Programming error no stroke	Process valve faulty	Replace process valve, re-programme
Programming error stroke < min. stroke	Minimum stroke was not reached (e.g. due to stroke limiter)	Ensure minimum stroke, re-programme
Programming error stroke < min. stroke	Shut off diaphragm compressed too much (diaphragm size 8)	Ensure correct compression of the shut off diaphragm, re-programme
Programming error after sensor error	The sensor range was exceeded during the programming procedure. Currently the process valve is in the valid sensor range.	Check the mounting kit, re-programme. Note the maximum stroke (see "Technical data")
Sensor error CLOSED or OPEN position	Sensor limit exceeded	Check the mounting kit, re-programme. Note the maximum stroke (see "Technical data")

Error	Error cause	Troubleshooting
Sensor error CLOSED position	Sensor limit in CLOSED position exceeded	Check the mounting kit, re-programme. Note the maximum stroke (see "Technical data")
Pneumatic fault OPEN position	Although the process valve has been set to the CLOSED position it remains in the OPEN position	Guarantee the compressed air supply Check the correct exhaust air duct (see "Pneumatic connections")
		Deactivate the manual override
		Check the process valve
	CLOSED position is not reached within the specified time	The value for "Alarm Closing Time[1)]" lies below the real operating time. Carry out automatic end position programming.
Pneumatic fault CLOSED position	Although the process valve has been set to the OPEN position it remains in the CLOSED position	Guarantee the compressed air supply Check the correct exhaust air duct (see "Pneumatic connections")
		Deactivate the manual override
		Check the process valve
	OPEN position is not reached within the specified time	The value for "Alarm Closing Time[1)]" lies below the real operating time. Carry out automatic end position programming.
Pneumatic fault middle position	The process valve is neither in OPEN nor in CLOSED position	Guarantee the compressed air supply Check the correct exhaust air duct (see "Pneumatic connections")
		Check the process valve
	OPEN or CLOSED position is not reached within the specified time	The value for "Alarm Closing Time[1)]" lies below the real operating time. Carry out automatic end position programming.

Error	Error cause	Troubleshooting
Supply voltage too low	Supply voltage < 18 V DC	Ensure supply voltage (see "Technical data")
Internal error	Memory error	Reprogram, if programming cannot be carried out, send the product back
The spring locks during installation	Mounting kit too long	Contact GEMÜ
Combi switchbox does not switch to programming mode	Magnet is held against the housing cover for too long	Only briefly hold the magnet against the housing cover until the LEDs flash

19 Inspection and maintenance

NOTICE

Exceptional maintenance work!

► Damage to the GEMÜ product.

● Any maintenance work and repairs not described in these operating instructions must not be performed without consulting the manufacturer first.

The operator must carry out regular visual examination of the products dependent on the operating conditions and the potential danger in order to prevent leakage and damage.

1. Have servicing and maintenance work performed by trained personnel.
2. Wear appropriate protective gear as specified in plant operator's guidelines.
3. Shut off plant or plant component.
4. Secure the plant or plant component against recommissioning.
5. Depressurize the plant or plant component.
6. Actuate products which are always in the same position four times a year.
7. Check whether the housing cover is closed.
8. Carry out inspection and maintenance for products in the potentially explosive area to DIN EN 60079-17.

19.1 Spare parts

No spare parts are available for this product. If it is faulty, please return it to GEMÜ for repair.

19.2 Cleaning the product

⚠ DANGER

Danger of explosion

► Risk of death or severe injury.

● Danger from sparking. Only clean the product with an anti-static or damp cloth.

- Do **not** clean the product with a high pressure cleaning device.

20 Disassembly

1. Disassemble in reverse order to assembly.
2. Deactivate the control medium.
3. Disconnect the control medium line(s).
4. Disassemble the product. Observe warning notes and safety information.

21 Disposal

1. Pay attention to adhered residual material and gas diffusion from penetrated media.
2. Dispose of all parts in accordance with the disposal regulations/environmental protection laws.

22 Returns

Legal regulations for the protection of the environment and personnel require that the completed and signed return delivery note is included with the dispatch documents. Returned goods can be processed only when this note is completed. If no return delivery note is included with the product, GEMÜ cannot process credits or repair work but will dispose of the goods at the operator's expense.

1. Clean the product.
2. Request a return delivery note from GEMÜ.
3. Complete the return delivery note.
4. Send the product with a completed return delivery note to GEMÜ.

23 Declaration of Incorporation according to 2006/42/EC (Machinery Directive)

GEMÜ

Declaration of incorporation

according to the EC Machinery Directive 2006/42/EC, Annex II, 1.B for partly completed machinery

We,

GEMÜ Gebr. Müller Apparatebau GmbH & Co. KG
Fritz-Müller-Straße 6-8
74653 Ingelfingen-Criesbach, Germany

declare that the following product complies with the essential requirements of the Machinery Directive 2006/42/EC.

Product:	GEMÜ 4242
Product name:	Combi switchbox with integrated pilot valve
From production date:	27th September 2021
Essential requirements of the Machinery Directive 2006/42/EC	1.1.5, 1.1.6, 1.1.7, 1.3., 1.3.2, 1.3.7, 1.3.8, 1.3.9, 1.5.1, 1.5.2, 1.5.3, 1.5.8, 1.5.14, 1.5.16, 1.6.1, 1.6.3;
Technical standard used in parts:	ISO 12100

We also declare that the specific technical documentation has been compiled in accordance with part B of Annex VII.

The manufacturer, or their authorised representative, undertakes to transmit, in response to a reasoned request, relevant documents on the partly completed machinery to the national authorities. This transmission takes place electronically.

Authorised documentation officer:

GEMÜ Gebr. Müller Apparatebau GmbH & Co. KG
Fritz-Müller-Straße 6-8
74653 Ingelfingen-Criesbach, Germany

This does not affect the industrial property rights.

Important note! The valve must only be commissioned in machinery that comply with the provisions of this Directive.

i.V.

M. Barghoorn
Head of Global Technics

Ingelfingen, 27th October 2021

24 Declaration of conformity according to 2014/30/EU (EMC Directive)

GEMÜ

Declaration of conformity

in accordance with 2014/30/EU (EMC Directive)

We,

GEMÜ Gebr. Müller Apparatebau GmbH & Co. KG
Fritz-Müller-Straße 6-8
74653 Ingelfingen-Criesbach, Germany

declare that the product listed below complies with the safety requirements of the EMC Directive 2014/30/EU.

Product:	GEMÜ 4242
Product name:	Combi switchbox with integrated pilot valve
Technical standard used in parts:	**Interference resistance:** EN IEC 61000-6-2:2019 **Interference emission:** EN IEC 61000-6-4:2019

Pursuant to Article 2 (2 d i) and (2 d ii) of EMC Directive 2014/30/EU, device variants that have such a low electromagnetic emission level due to their physical properties or that contribute to electromagnetic emissions to such a low extent that radio and telecommunication equipment and other equipment can operate as intended, and that operate without unacceptable degradation in the presence electromagnetic disturbance normally consequent upon its intended use, do not fall under this Directive.

Note:
The standards are only applied to products with a motorized actuator.

M. Barghoorn
Head of Global Technics

Ingelfingen, 27th October 2021

25 Declaration of Conformity in accordance with 2014/34/EU (ATEX)

GEMÜ

Declaration of conformity

in accordance with 2014/34/EU (ATEX)

We,

GEMÜ Gebr. Müller Apparatebau GmbH & Co. KG
Fritz-Müller-Straße 6-8
74653 Ingelfingen-Criesbach, Germany

declare that the product listed below complies with the requirements of directive 2014/34/EU for intended use in potentially explosive areas.

Product:	GEMÜ 4242 (Special version X)
Product name:	Combi switchbox with integrated pilot valve
Explosion protection designation	Gas: Ⓔx II 3G Ex ec nC IIC T4 Gc X Dust: Ⓔx II 3D Ex tc IIIC T80°C Dc X
Explanations:	For special conditions or operation limits see chapter "Correct use" in the operating instructions.

The Essential Safety and Health Requirements are met by compliance with the standards listed below that are applicable for the above mentioned product:

- IEC 60079-0: 2011 (EN 60079-0:2012+A11:2013)
- IEC 60079-15: 2010 (EN 60079-15:2010)
- IEC 60079-31: 2013 (EN 60079-31:2014)
- IEC 60079-7: 2017 (EN 60079-7+A1:2015)

The sole responsibility for issuing this declaration of conformity lies with the company GEMÜ Gebr. Müller Apparatebau GmbH & Co. KG.

M. Barghoorn
Head of Global Technics

Ingelfingen, 27th October 2021

GEMÜ Gebr. Müller Apparatebau GmbH & Co. KG
Fritz-Müller-Straße 6-8, 74653 Ingelfingen-Criesbach, Germany
Phone +49 (0) 7940 1230 · info@gemue.de
www.gemu-group.com

Subject to alteration

10.2022 | 88792712