LIAG® USA

LAUFER
Valve Technology Inc.

Hygienic Arc Valves & Pigging Systems

Copyright © LAUFER Valve Technology Inc. 2024 - All rights reserved

General Information

1

LIAG® Free Flow Arc Valves

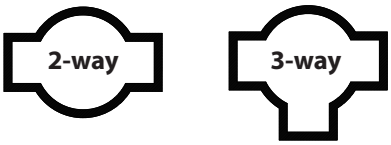

2

LIAG® Pig Diverter Arc Valves

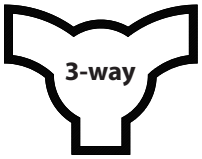

3

Customized LIAG® Arc Valves

4.1 2-Way Control Arc Valve
4.2 Venturi Powder Control Valve
4.3 EASY-OPEN Arc Valve for the meat industry
4.4 Leakage control of the moving o-ring seal of Arc Valves
4.5 Flush Bottom Tank Outlet Valve

4

Spare Parts and Accessoires to chapter 2,3 and 4

5

LIAG® DMV Pigging System

6

High End Solutions

LIAG®
Master Distributor

LAUFER VALVE TECHNOLOGY

Sanitary valves and pigging systems from LIAG® offer the maximum in quality and product safety for the low-germ processing of high grade media.

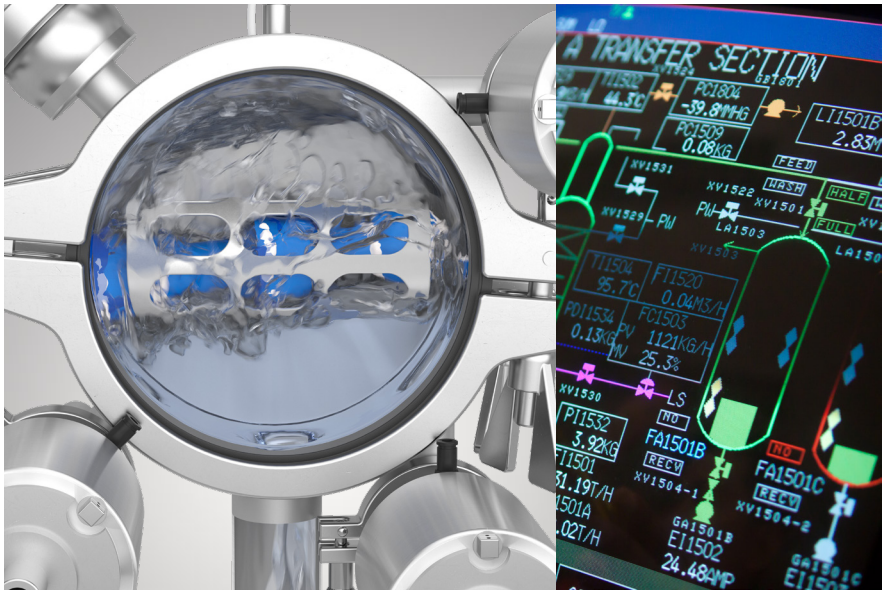

Know-how, on which you can rely!

Developed from field experience - for field use!
Many years of experience on process engineering and a consistent focus on customer demands are the basis of innovative technologies and customized system solutions.
Our primary focus is on maximum process safety and economic efficiency.

Modular and efficient!

The quality assurance system of our parent company LIAG®/Germany, ensures the very highest standard; at the same time, we place emphasis on modular systems and production flexibility.

Your requirement – our solution!

Your requirement - our solution!
Our worldwide sales and service network offers professional advice and support on all aspects of our delivery program.

Further informationen on
www.laufer-valve.com

LIAG® FREE FLOW ARC VALVES

Ideal for pasty media and low-germ pigging processes

Ideal for pasty media and hygienic pigging processes LIAG® free flow arc valves have been designed according to hygienic design guidelines to meet the high demands of process engineering applications. LIAG® valves are particularly suited for viscous/pasty products and fluids containing solid particles on account of a totally clear passage, as well as easy and thorough cleaning in place.

This valve series thus provides optimum conditions for a wide variety of pigging system applications. By virtue of their simplicity of design and minimum number of components and wearing parts, LIAG® valves are characterized by maximum hygiene, low maintenance and safe operation.

Features

- No dead pockets
- CIP/SIP capability (hygienic design)
- Totally clear passage – no pressure loss
- No product remainders or sticking of solid particles
- Designed to be passed with DMV lip pigs
- Minimum number of components and wearing parts
- Can be completely dismantled even when welded in place
- 3-A 51-01 and FDA compliance
- CRN

Principle of Design

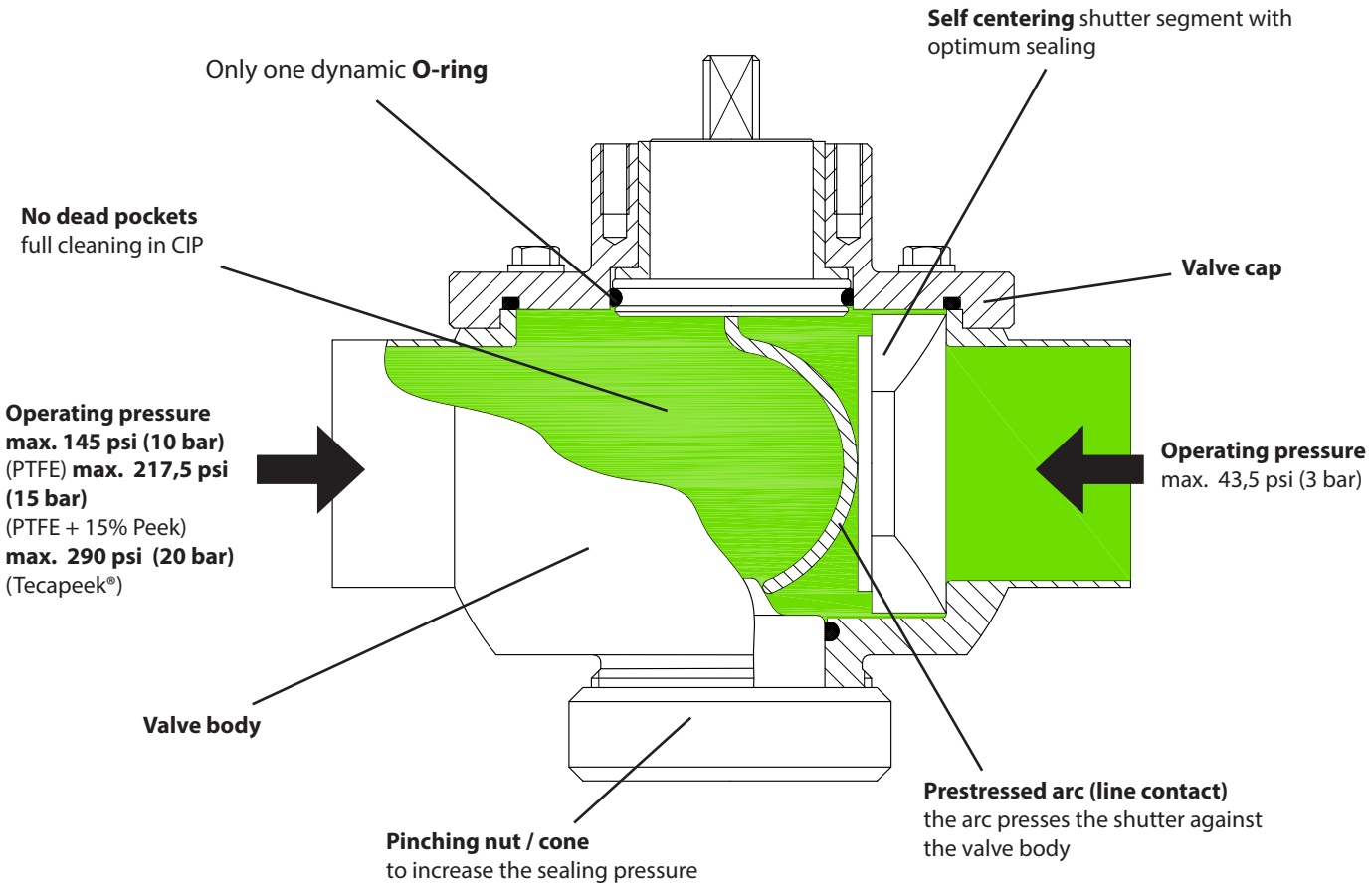

Operating positions

2-way arc valve

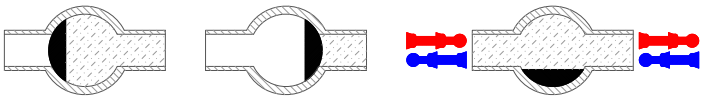

3-way arc valve

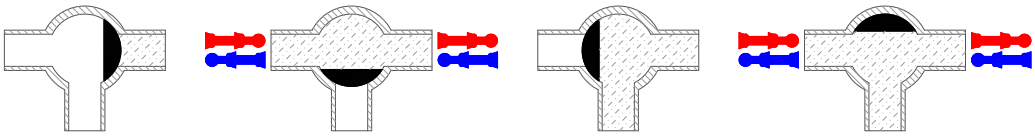

Product area Shutter Pig direction

Technical Data Overview

Nominal sizes	
Inch:	1" / 1.5" / 2" / 2.5" / 3" / 4" / 6"
Materials	
Inox parts in contact with product:	AISI 316L (1.4404 / 1.4435)
Other inox parts:	AISI 304 (1.4301)
O-ring seals:	EPDM, FKM (Viton®), FEP, other grades upon request
Shutter:	PTFE
Surfaces	
In contact with product:	Ra ≤ 32 µin (Ra ≤ 0,8 µm)
Temperature	
Operating temperature:	230°F (110°C)
Short-term:	284°F (140°C) - optionally up to 392°F (200°C)
Operating pressure	
Pressure behind arc:	145 psi (10 bar) - optionally up to 290.1psi (20 bar)
Pressure against arc:	43.5 psi (3 bar)
Versions	
2- way /3 - way	
Operation	
Manual:	with handle (4 locking positions)
Pneumatic:	• Vertical pneumatic actuator (AISI 304) • Horizontal pneumatic actuator (aluminium housing)
Valve connection	
Clamp connection:	Tri-clamp
Welded ends:	Inch, DIN
Male ends:	DIN 11851

Further options / Certificates

- 4-way version
- Shutter material; alternatively: PTFE+15% Peek , Tecapeek®
- Heated version
- Leakage control of moving O-ring seal / steam barrier with ball-bearing supported selector shaft
- Combination of different types of connection
- Delivery and adaptation to actuators of different manufacture per Namur NE14 and DIN EN ISO5211
- 3-A 51-01 and FDA compliance
- CRN

ARC VALVES

Inch

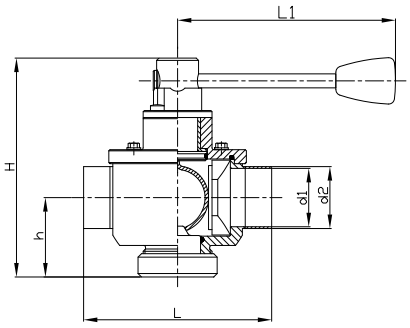

2-way arc valve, manual, welded ends

VALVE SIZE inch (mm)	Type	Ød1	Ød2	H	h	L	L1
1.00 (25.4)	**25C52M22**	0.87 (22.1)	1.00 (25.4)	5.71 (145)	1.97 (50)	4.33 (110)	6.30 (160)
1.50 (38.1)	**38C52M22**	1.37 (34.8)	1.50 (38.1)	7.09 (180)	2.56 (65)	5.51 (140)	6.30 (160)
2.00 (50.8)	**51C52M22**	1.87 (47.5)	2.00 (50.8)	7.48 (190)	2.76 (70)	6.46 (164)	7.48 (190)
2.50 (63.5)	**63C52M22**	2.37 (60.2)	2.50 (63.5)	7.87 (200)	2.95 (75)	8.27 (210)	7.48 (190)
3.00 (76.2)	**76C52M22**	2.87 (72.9)	3.00 (76.2)	8.46 (215)	3.15 (80)	8.66 (220)	7.48 (190)
4.00 (101.6)	**102C52M22**	3.83 (97.4)	4.00 (101.6)	10.43 (265)	4.33 (110)	12.20 (310)	10.63 (270)
6.00 (152.4)	**152C52M**	5.78 (146.9)	6.00 (152.4)	13.58 (345)	5.51 (140)	19.69 (500)	10.63 (270)

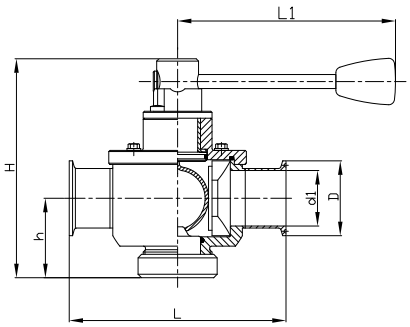

2-way arc valve, manual, TC-clamp

VALVE SIZE inch (mm)	Type	Ød1	ØD	H	h	L	L1
1.00 (25.4)	**25C520M22**	0.87 (22.1)	1.99 (50.5)	5.71 (145)	1.97 (50)	5.31 (135)	6.30 (160)
1.50 (38.1)	**38C520M22**	1.37 (34.8)	1.99 (50.5)	7.09 (180)	2.56 (65)	6.50 (165)	6.30 (160)
2.00 (50.8)	**51C520M22**	1.87 (47.5)	2.52 (64.0)	7.48 (190)	2.76 (70)	7.44 (189)	7.48 (190)
2.50 (63.5)	**63C520M22**	2.37 (60.2)	3.05 (77.5)	7.87 (200)	2.95 (75)	9.25 (235)	7.48 (190)
3.00 (76.2)	**76C520M22**	2.87 (72.9)	3.58 (91.0)	8.46 (215)	3.15 (80)	9.65 (245)	7.48 (190)
4.00 (101.6)	**102C520M22**	3.83 (97.4)	4.68 (119.0)	10.43 (265)	4.33 (110)	13.19 (335)	10.63 (270)
6.00 (152.4)	**152C520M**	5.78 (146.9)	6.57 (167.0)	13.58 (345)	5.51 (140)	19.69 (500)	10.63 (270)

ARC VALVES

Inch

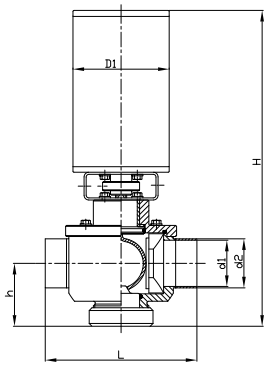

2-way arc valve, pneumatic (air/air - air/spring), welded ends

VALVE SIZE inch (mm)	Type	Ød1	Ød2	H	h	L	ØD1
1.00 (25.4)	**25C52A22**	0.87 (22.1)	1.00 (25.4)	11.81 (300)	1.97 (50)	4.33 (110)	3.50 (89)
1.50 (38.1)	**38C52A22**	1.37 (34.8)	1.50 (38.1)	13.19 (335)	2.56 (65)	5.51 (140)	3.50 (89)
2.00 (50.8)	**51C52A22**	1.87 (47.5)	2.00 (50.8)	13.39 (340)	2.76 (70)	6.46 (164)	4.09 (104)
2.50 (63.5)	**63C52A22**	2.37 (60.2)	2.50 (63.5)	13.98 (355)	2.95 (75)	8.27 (210)	4.09 (104)
3.00 (76.2)	**76C52A22**	2.87 (72.9)	3.00 (76.2)	16.61 (422)	3.15 (80)	8.66 (220)	5.08 (129)
4.00 (101.6)	**102C52A22**	3.83 (97.4)	4.00 (101.6)	18.66 (474)	4.33 (110)	12.20 (310)	5.08 (129)

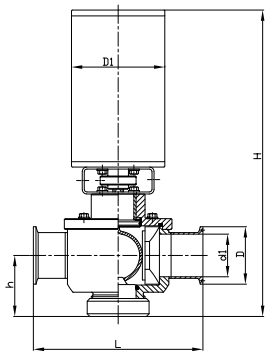

2-way arc valve, pneumatic (air/air - air/spring), TC-clamp

VALVE SIZE inch (mm)	Type	Ød1	ØD	H	h	L	ØD1
1.00 (25.4)	**25C520A22**	0.87 (22.1)	1.99 (50.5)	11.81 (300)	1.97 (50)	5.31 (135)	3.50 (89)
1.50 (38.1)	**38C520A22**	1.37 (34.8)	1.99 (50.5)	13.19 (335)	2.56 (65)	6.50 (165)	3.50 (89)
2.00 (50.8)	**51C520A22**	1.87 (47.5)	2.52 (64.0)	13.39 (340)	2.76 (70)	7.44 (189)	4.09 (104)
2.50 (63.5)	**63C520A22**	2.37 (60.2)	3.05 (77.5)	13.98 (355)	2.95 (75)	9.25 (235)	4.09 (104)
3.00 (76.2)	**76C520A22**	2.87 (72.9)	3.58 (91.0)	16.61 (422)	3.15 (80)	9.65 (245)	5.08 (129)
4.00 (101.6)	**102C520A22**	3.83 (97.4)	4.68 (119.0)	18.66 (474)	4.33 (110)	13.19 (335)	5.08 (129)

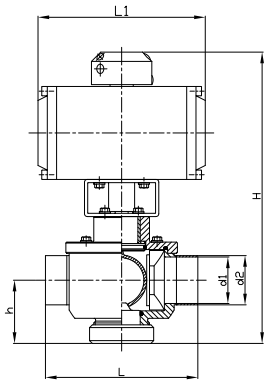

2-way arc valve, pneumatic (air/air - air/spring), welded ends

VALVE SIZE inch (mm)	Type	Ød1	Ød2	H	h	L	L1
1.00 (25.4)	**25C52Ab22**	0.87 (22.1)	1.00 (25.4)	11.30 (287)	1.97 (50)	4.33 (110)	6.34 (161)
1.50 (38.1)	**38C52Ab22**	1.37 (34.8)	1.50 (38.1)	12.60 (320)	2.56 (65)	5.51 (140)	6.34 (161)
2.00 (50.8)	**51C52Ab22**	1.87 (47.5)	2.00 (50.8)	12.91 (328)	2.76 (70)	6.46 (164)	6.34 (161)
2.50 (63.5)	**63C52Ab22**	2.37 (60.2)	2.50 (63.5)	13.46 (342)	2.95 (75)	8.27 (210)	6.34 (161)
3.00 (76.2)	**76C52Ab22**	2.87 (72.9)	3.00 (76.2)	14.57 (370)	3.15 (80)	8.66 (220)	8.23 (209)
4.00 (101.6)	**102C52Ab22**	3.83 (97.4)	4.00 (101.6)	16.65 (423)	4.33 (110)	12.20 (310)	8.23 (209)
6.00 (152.4)	**152C52Ab**	5.78 (146.9)	6.00 (152.4)	21.26 (540)	5.51 (140)	19.69 (500)	13.11 (333)

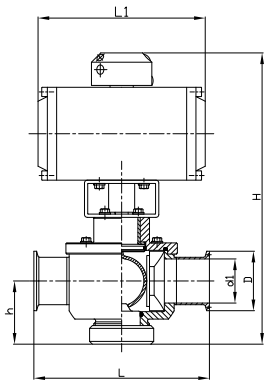

2-way arc valve, pneumatic (air/air - air/spring), TC-clamp

VALVE SIZE inch (mm)	Type	Ød1	ØD	H	h	L	L1
1.00 (25.4)	**25C520Ab22**	0.87 (22.1)	1.99 (50.5)	11.30 (287)	1.97 (50)	5.31 (135)	6.34 (161)
1.50 (38.1)	**38C520Ab22**	1.37 (34.8)	1.99 (50.5)	12.60 (320)	2.56 (65)	6.50 (165)	6.34 (161)
2.00 (50.8)	**51C520Ab22**	1.87 (47.5)	2.52 (64.0)	12.91 (328)	2.76 (70)	7.44 (189)	6.34 (161)
2.50 (63.5)	**63C520Ab22**	2.37 (60.2)	3.05 (77.5)	13.46 (342)	2.95 (75)	9.25 (235)	6.34 (161)
3.00 (76.2)	**76C520Ab22**	2.87 (72.9)	3.58 (91.0)	14.57 (370)	3.15 (80)	9.65 (245)	8.23 (209)
4.00 (101.6)	**102C520Ab22**	3.83 (97.4)	4.68 (119.0)	16.65 (423)	4.33 (110)	13.19 (335)	8.23 (209)
6.00 (152.4)	**152C520Ab**	5.78 (146.9)	6.57 (167.0)	21.26 (540)	5.51 (140)	19.69 (500)	13.11 (333)

ARC VALVES

Inch

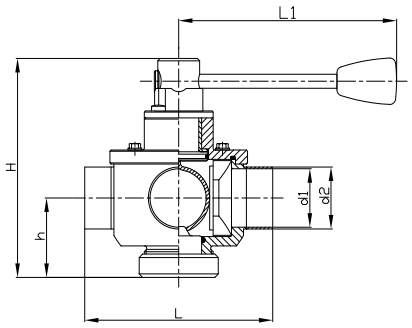

3-way arc valve, manual, welded ends

VALVE SIZE inch (mm)	Type	Ød1	Ød2	H	h	L	L1
1.00 (25.4)	**25C53M22**	0.87 (22.1)	1.00 (25.4)	5.71 (145)	1.97 (50)	4.33 (110)	6.30 (160)
1.50 (38.1)	**38C53M22**	1.37 (34.8)	1.50 (38.1)	7.09 (180)	2.56 (65)	5.51 (140)	6.30 (160)
2.00 (50.8)	**51C53M22**	1.87 (47.5)	2.00 (50.8)	7.48 (190)	2.76 (70)	6.46 (164)	7.48 (190)
2.50 (63.5)	**63C53M22**	2.37 (60.2)	2.50 (63.5)	7.87 (200)	2.95 (75)	8.27 (210)	7.48 (190)
3.00 (76.2)	**76C53M22**	2.87 (72.9)	3.00 (76.2)	8.46 (215)	3.15 (80)	8.66 (220)	7.48 (190)
4.00 (101.6)	**102C53M22**	3.83 (97.4)	4.00 (101.6)	10.43 (265)	4.33 (110)	12.20 (310)	10.63 (270)
6.00 (152.4)	**152C53M**	5.78 (146.9)	6.00 (152.4)	13.58 (345)	5.51 (140)	19.69 (500)	10.63 (270)

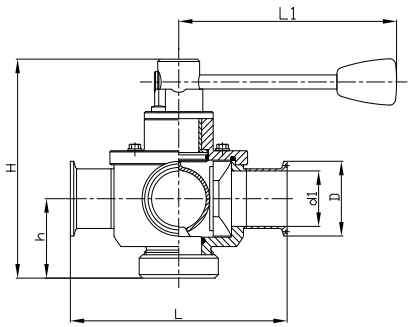

3-way arc valve, manual, TC-clamp

VALVE SIZE inch (mm)	Type	Ød1	ØD	H	h	L	L1
1.00 (25.4)	**25C530M22**	0.87 (22.1)	1.99 (50.5)	5.71 (145)	1.97 (50)	5.31 (135)	6.30 (160)
1.50 (38.1)	**38C530M22**	1.37 (34.8)	1.99 (50.5)	7.09 (180)	2.56 (65)	6.50 (165)	6.30 (160)
2.00 (50.8)	**51C530M22**	1.87 (47.5)	2.52 (64.0)	7.48 (190)	2.76 (70)	7.44 (189)	7.48 (190)
2.50 (63.5)	**63C530M22**	2.37 (60.2)	3.05 (77.5)	7.87 (200)	2.95 (75)	9.25 (235)	7.48 (190)
3.00 (76.2)	**76C530M22**	2.87 (72.9)	3.58 (91.0)	8.46 (215)	3.15 (80)	9.65 (245)	7.48 (190)
4.00 (101.6)	**102C530M22**	3.83 (97.4)	4.68 (119.0)	10.43 (265)	4.33 (110)	13.19 (335)	10.63 (270)
6.00 (152.4)	**152C530M**	5.78 (146.9)	6.57 (167.0)	13.58 (345)	5.51 (140)	19.69 (500)	10.63 (270)

ARC VALVES

Inch

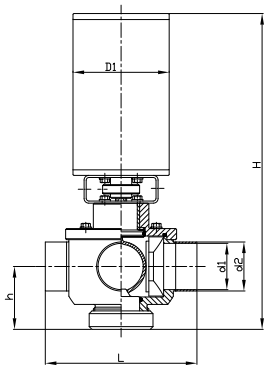

3-way arc valve, pneumatic (air/air - air/spring), welded ends

VALVE SIZE inch (mm)	Type	Ød1	Ød2	H	h	L	ØD1
1.00 (25.4)	**25C53A22**	0.87 (22.1)	1.00 (25.4)	11.81 (300)	1.97 (50)	4.33 (110)	3.50 (89)
1.50 (38.1)	**38C53A22**	1.37 (34.8)	1.50 (38.1)	13.19 (335)	2.56 (65)	5.51 (140)	3.50 (89)
2.00 (50.8)	**51C53A22**	1.87 (47.5)	2.00 (50.8)	13.39 (340)	2.76 (70)	6.46 (164)	4.09 (104)
2.50 (63.5)	**63C53A22**	2.37 (60.2)	2.50 (63.5)	13.98 (355)	2.95 (75)	8.27 (210)	4.09 (104)
3.00 (76.2)	**76C53A22**	2.87 (72.9)	3.00 (76.2)	16.61 (422)	3.15 (80)	8.66 (220)	5.08 (129)
4.00 (101.6)	**102C53A22**	3.83 (97.4)	4.00 (101.6)	18.66 (474)	4.33 (110)	12.20 (310)	5.08 (129)

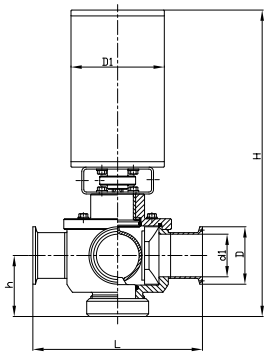

3-way arc valve, pneumatic (air/air - air/spring), TC-clamp

VALVE SIZE inch (mm)	Type	Ød1	ØD	H	h	L	ØD1
1.00 (25.4)	**25C530A22**	0.87 (22.1)	1.99 (50.5)	11.81 (300)	1.97 (50)	5.31 (135)	3.50 (89)
1.50 (38.1)	**38C530A22**	1.37 (34.8)	1.99 (50.5)	13.19 (335)	2.56 (65)	6.50 (165)	3.50 (89)
2.00 (50.8)	**51C530A22**	1.87 (47.5)	2.52 (64.0)	13.39 (340)	2.76 (70)	7.44 (189)	4.09 (104)
2.50 (63.5)	**63C530A22**	2.37 (60.2)	3.05 (77.5)	13.98 (355)	2.95 (75)	9.25 (235)	4.09 (104)
3.00 (76.2)	**76C530A22**	2.87 (72.9)	3.58 (91.0)	16.61 (422)	3.15 (80)	9.65 (245)	5.08 (129)
4.00 (101.6)	**102C530A22**	3.83 (97.4)	4.68 (119.0)	18.66 (474)	4.33 (110)	13.19 (335)	5.08 (129)

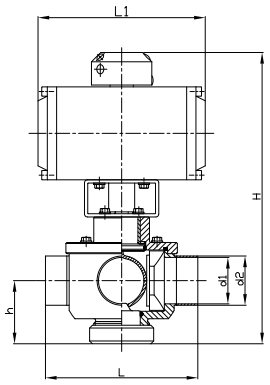

3-way arc valve, pneumatic (air/air - air/spring), welded ends

VALVE SIZE inch (mm)	Type	Ød1	Ød2	H	h	L	L1
1.00 (25.4)	**25C53Ab22**	0.87 (22.1)	1.00 (25.4)	11.30 (287)	1.97 (50)	4.33 (110)	6.34 (161)
1.50 (38.1)	**38C53Ab22**	1.37 (34.8)	1.50 (38.1)	12.60 (320)	2.56 (65)	5.51 (140)	6.34 (161)
2.00 (50.8)	**51C53Ab22**	1.87 (47.5)	2.00 (50.8)	12.91 (328)	2.76 (70)	6.46 (164)	6.34 (161)
2.50 (63.5)	**63C53Ab22**	2.37 (60.2)	2.50 (63.5)	13.46 (342)	2.95 (75)	8.27 (210)	6.34 (161)
3.00 (76.2)	**76C53Ab22**	2.87 (72.9)	3.00 (76.2)	14.57 (370)	3.15 (80)	8.66 (220)	8.23 (209)
4.00 (101.6)	**102C53Ab22**	3.83 (97.4)	4.00 (101.6)	16.65 (423)	4.33 (110)	12.20 (310)	8.23 (209)
6.00 (152.4)	**152C53Ab**	5.78 (146.9)	6.00 (152.4)	21.26 (540)	5.51 (140)	19.69 (500)	13.11 (333)

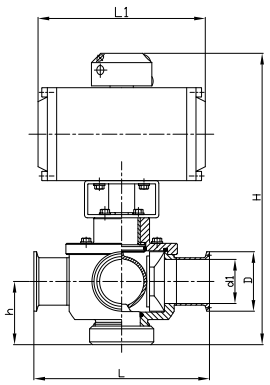

3-way arc valve, pneumatic (air/air - air/spring), TC-clamp

VALVE SIZE inch (mm)	Type	Ød1	ØD	H	h	L	L1
1.00 (25.4)	**25C530Ab22**	0.87 (22.1)	1.99 (50.5)	11.30 (287)	1.97 (50)	5.31 (135)	6.34 (161)
1.50 (38.1)	**38C530Ab22**	1.37 (34.8)	1.99 (50.5)	12.60 (320)	2.56 (65)	6.50 (165)	6.34 (161)
2.00 (50.8)	**51C530Ab22**	1.87 (47.5)	2.52 (64.0)	12.91 (328)	2.76 (70)	7.44 (189)	6.34 (161)
2.50 (63.5)	**63C530Ab22**	2.37 (60.2)	3.05 (77.5)	13.46 (342)	2.95 (75)	9.25 (235)	6.34 (161)
3.00 (76.2)	**76C530Ab22**	2.87 (72.9)	3.58 (91.0)	14.57 (370)	3.15 (80)	9.65 (245)	8.23 (209)
4.00 (101.6)	**102C530Ab22**	3.83 (97.4)	4.68 (119.0)	16.65 (423)	4.33 (110)	13.19 (335)	8.23 (209)
6.00 (152.4)	**152C530Ab**	5.78 (146.9)	6.57 (167.0)	21.26 (540)	5.51 (140)	19.69 (500)	13.11 (333)

LIAG® PIG DIVERTER ARC VALVES

Ideal for low-germ pigging processes

LIAG® pig diverter arc valves have been designed according to hygienic design guidelines to meet the high demands of process engineering applications. They build upon the same design principle as free flow arc valves.
By virtue of this principle no products remain in the valves during operation.
The prime use of LIAG® pig diverter arc valves is with sterile pigging systems as they can be disassembled easily and quickly even when welded in place, and additionally, offer high CIP capability.

Features

- No dead pockets
- CIP/SIP capability (hygienic design)
- Totally clear passage – no pressure loss
- No product remainders or sticking of solid particles
- Designed to be passed with DMV lip pigs
- Compact design for 90° installation
- Minimum number of components and wearing parts
- Can be completely dismantled even when welded in place
- 3-A 51-01 and FDA compliance
- CRN

3

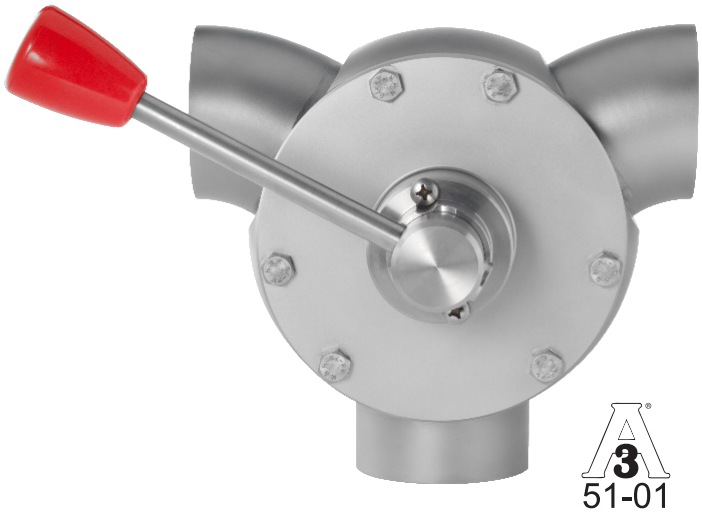

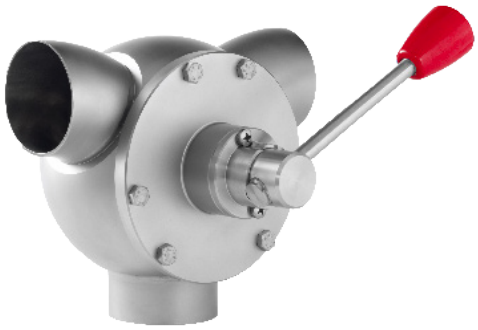

Principle of Design

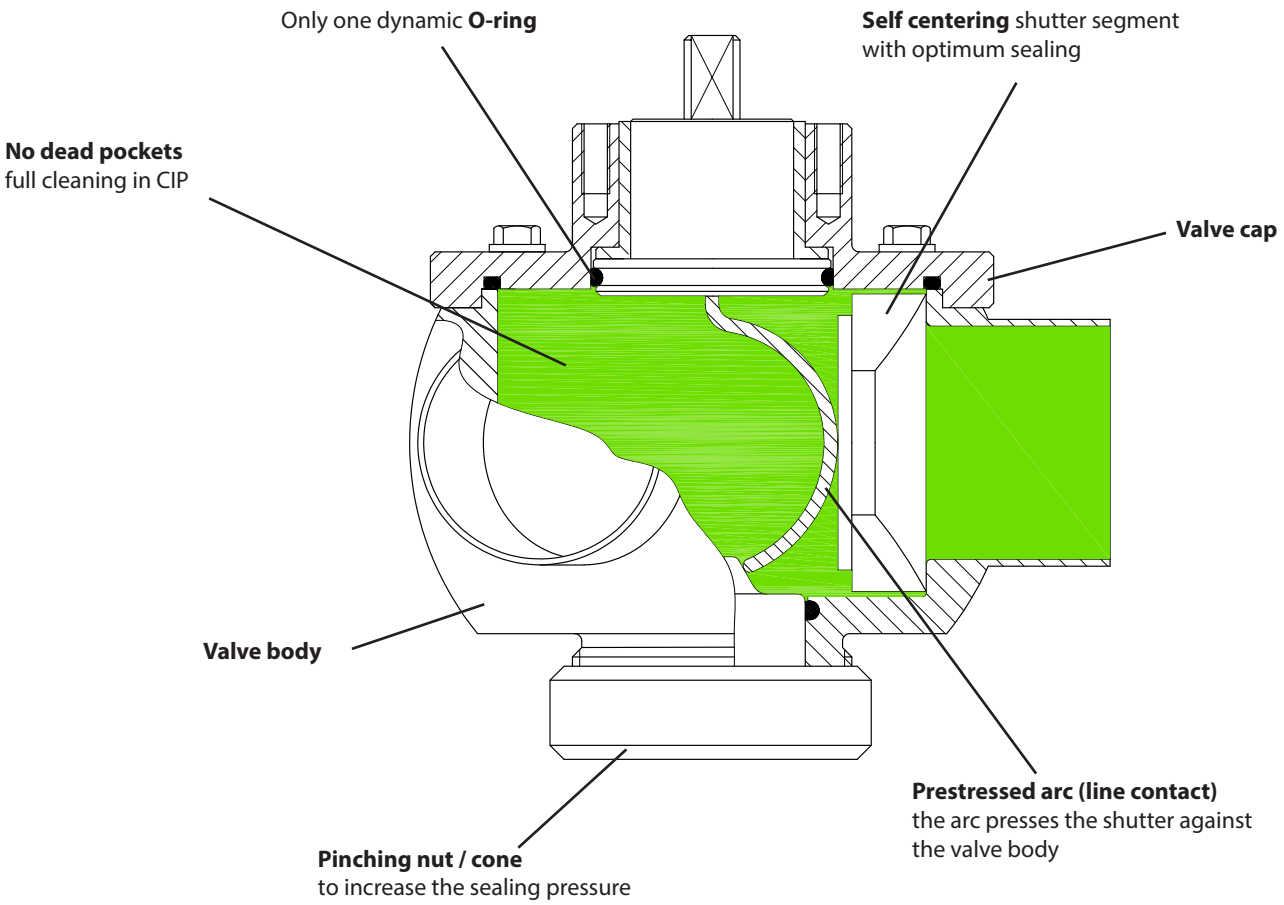

Operating positions

Pig diverter arc valve 90°/120°

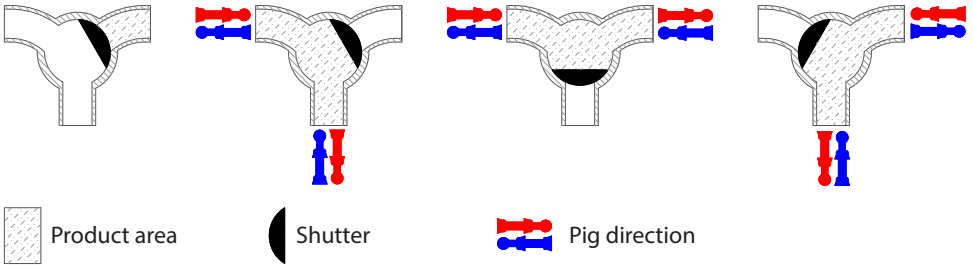

Technical Data Overview

Nominal sizes	
Inch:	1.5" / 2" / 2.5" / 3" / 4"
Materials	
Inox parts in contact with product:	AISI 316L (1.4404 / 1.4435)
Other inox parts:	AISI 304 (1.4301)
O-ring seals:	EPDM, FKM (Viton®), FEP, other grades upon request
Shutter:	PTFE
Surfaces	
In contact with product:	Ra ≤ 32 µin (Ra ≤ 0,8 µm)
Temperature	
Operating temperature:	230°F (110°C)
Short-term:	284°F (140°C) - optionally up to 392°F (200°C)
Operating pressure	
Pressure behind arc:	145 psi (10 bar) - optionally up to 290.1psi (20 bar)
Pressure against arc:	43.5 psi (3 bar)
Versions	
3-way (3 x 120°)	
Operation	
Manual:	with handle (4 locking positions)
Pneumatic:	Horizontal pneumatic actuator (aluminium housing)
Valve connection	
Clamp connection:	Tri-clamp
Welded ends:	Inch, DIN
Male ends:	DIN 11851

Further options / Certificates

- Shutter material; alternatively: PTFE+15% Peek, Tecapeek®
- Heated version
- Combination of different types of connection
- Delivery and adaptation to actuators of different manufacture per Namur NE14 and DIN EN ISO5211
- 3-A 51-01 and FDA compliance
- CRN

3

PIG DIVERTER ARC VALVES

Inch

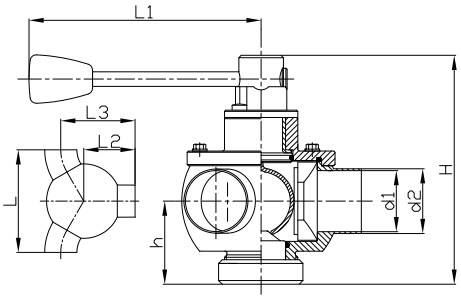

90°/120° pig diverter arc valve, manual, welded ends

VALVE SIZE inch (mm)	Type	Ød1	Ød2	H	h	L	L1	L2	L3
1.50 (38.1)	**38CV53M22**	1.37 (34.8)	1.50 (38.1)	7.09 (180)	2.56 (65)	5.16 (131)	6.30 (160)	2.58 (65.5)	3.78 (96)
2.00 (50.8)	**51CV53M22**	1.87 (47.5)	2.00 (50.8)	7.48 (190)	2.76 (70)	6.06 (154)	7.48 (190)	3.03 (77)	4.49 (114)
2.50 (63.5)	**63CV53M22**	2.37 (60.2)	2.50 (63.5)	7.87 (200)	2.95 (75)	7.80 (198)	7.48 (190)	3.90 (99)	5.43 (138)
3.00 (76.2)	**76CV53M22**	2.87 (72.9)	3.00 (76.2)	8.46 (215)	3.15 (80)	8.58 (218)	7.48 (190)	4.29 (109)	6.22 (158)
4.00 (101.6)	**102CV53M22**	3.83 (97.4)	4.00 (101.6)	10.43 (265)	4.33 (110)	11.73 (298)	10.63 (270)	5.87 (149)	8.54 (217)

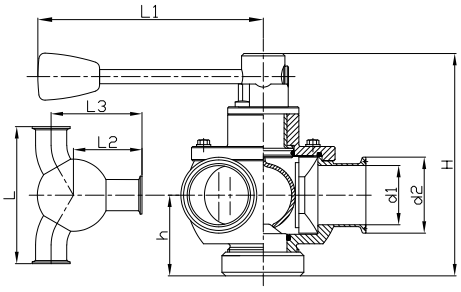

90°/120° pig diverter arc valve, manual, TC-clamp

VALVE SIZE inch (mm)	Type	Ød1	Ød2	H	h	L	L1	L2	L3
1.50 (38.1)	**38CV530M22**	1.37 (34.8)	1.99 (50.5)	7.09 (180)	2.56 (65)	6.14 (156)	6.30 (160)	3.07 (78)	4.29 (109)
2.00 (50.8)	**51CV530M22**	1.87 (47.5)	2.52 (64)	7.48 (190)	2.76 (70)	7.05 (179)	7.48 (190)	3.52 (89.5)	5.00 (127)
2.50 (63.5)	**63CV530M22**	2.37 (60.2)	3.05 (77.5)	7.87 (200)	2.95 (75)	8.78 (223)	7.48 (190)	4.39 (111.5)	5.94 (151)
3.00 (76.2)	**76CV530M22**	2.87 (72.9)	3.58 (91)	8.46 (215)	3.15 (80)	9.57 (243)	7.48 (190)	4.78 (121.5)	6.73 (171)
4.00 (101.6)	**102CV530M22**	3.83 (97.4)	4.69 (119)	10.43 (265)	4.33 (110)	12.72 (323)	10.63 (270)	6.36 (161.5)	9.06 (230)

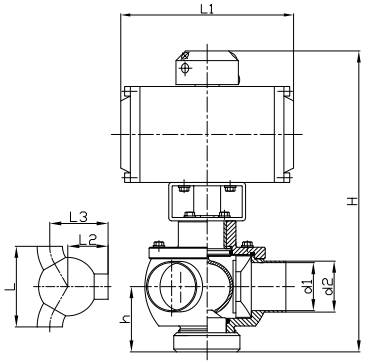

90°/120° pig diverter arc valve, pneumatic (air/air), welded ends

VALVE SIZE inch (mm)	Type	Ød1	Ød2	H	h	L	L1	L2	L3
1.50 (38.1)	**38CV53Ab22**	1.37 (34.8)	1.50 (38.1)	12.87 (327)	2.56 (65)	5.16 (131)	7.17 (182)	2.58 (65.5)	3.78 (96)
2.00 (50.8)	**51CV53Ab22**	1.87 (47.5)	2.00 (50.8)	13.11 (333)	2.76 (70)	6.06 (154)	7.17 (182)	3.03 (77)	4.49 (114)
2.50 (63.5)	**63CV53Ab22**	2.37 (60.2)	2.50 (63.5)	13.66 (347)	2.95 (75)	7.80 (198)	7.17 (182)	3.90 (99)	5.43 (138)
3.00 (76.2)	**76CV53Ab22**	2.87 (72.9)	3.00 (76.2)	14.80 (376)	3.15 (80)	8.58 (218)	9.29 (236)	4.29 (109)	6.22 (158)
4.00 (101.6)	**102CV53Ab22**	3.83 (97.4)	4.00 (101.6)	16.85 (428)	4.33 (110)	11.73 (298)	9.29 (236)	5.87 (149)	8.54 (217)

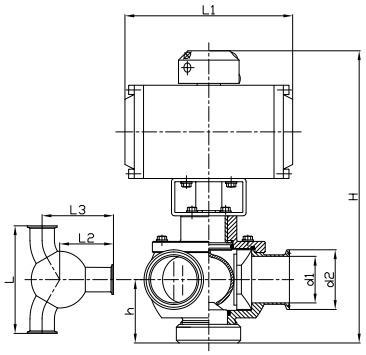

90°/120° pig diverter arc valve, pneumatic (air/air), TC-clamp

VALVE SIZE inch (mm)	Type	Ød1	Ød2	H	h	L	L1	L2	L3
1.50 (38.1)	**38CV530Ab22**	1.37 (34.8)	1.99 (50.5)	12.87 (327)	2.56 (65)	6.14 (156)	7.17 (182)	3.07 (78)	4.29 (109)
2.00 (50.8)	**51CV530Ab22**	1.87 (47.5)	2.52 (64)	13.11 (333)	2.76 (70)	7.05 (179)	7.17 (182)	3.52 (89.5)	5.00 (127)
2.50 (63.5)	**63CV530Ab22**	2.37 (60.2)	3.05 (77.5)	13.66 (347)	2.95 (75)	8.78 (223)	7.17 (182)	4.39 (111.5)	5.94 (151)
3.00 (76.2)	**76CV530Ab22**	2.87 (72.9)	3.58 (91)	14.80 (376)	3.15 (80)	9.57 (243)	9.29 (236)	4.78 (121.5)	6.73 (171)
4.00 (101.6)	**102CV530Ab22**	3.83 (97.4)	4.69 (119)	16.85 (428)	4.33 (110)	12.72 (323)	9.29 (236)	6.36 (161.5)	9.06 (230)

3

CUSTOMIZED LIAG® ARC VALVES

4.1 2-Way Control Arc Valve

4.2 Venturi Powder Control Valve

4.3 EASY-OPEN Arc Valve for the meat industry

4.4 Leakage control of the moving O-ring seal

4.5 Flush Bottom Tank Outlet Valve

4

4.1 2-Way Control Arc Valve

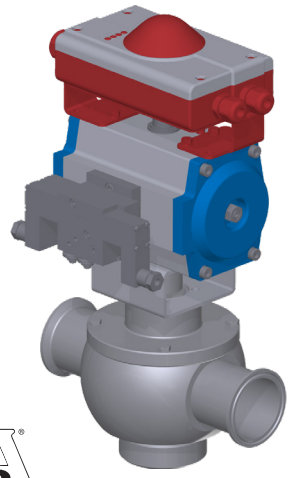

Ideal for controlling sensitive media containing solid particles

On account of their favorable flow characteristic LIAG® free flow arc valves are particularly suited for proportioning viscous and pasty products. Depending on the product to be proportioned LIAG® control arc valves can be delivered with various shutter qualities and linearization inserts. Control is performed via a standard 4-20mA (0-10V) electropneumatic actuator.

The control characteristic / rate of flow or the control range can be adapted to customer requirements.

Features

- No dead pockets
- CIP/SIP capability
- Product-saving proportioning
- No product remainders or sticking of solid particles
- Full linearization option of control characteristic
- Minimum number of components and wearing parts
- Can be completely dismantled even when welded in place
- Identical wearing and spare parts as arc valves
- 3-A 51-01 and FDA compliance
- CRN

4

Flow characteristic LIAG® Control Arc Valve

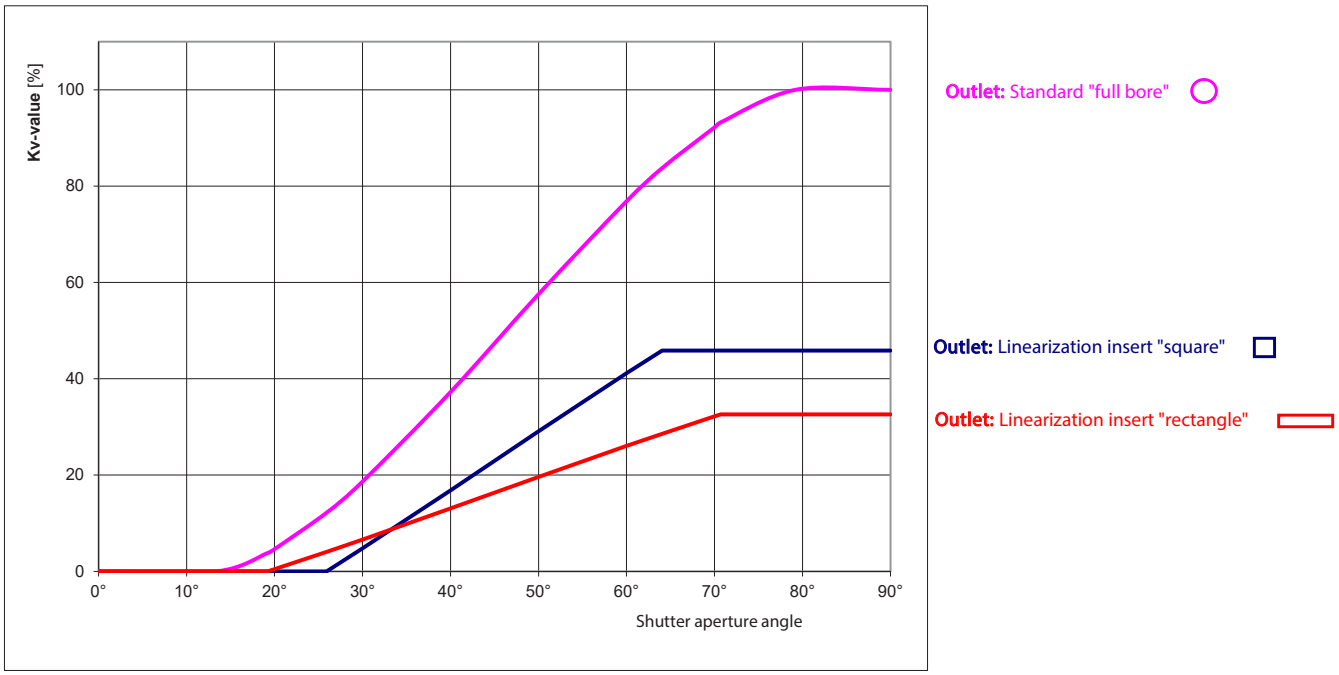

Technical Data Overview

Nominal sizes

Inch:	1" / 1.5" / 2" / 2.5" / 3" / 4"

Materials

Inox parts in contact with product:	AISI 316L (1.4404 / 1.4435)
Other inox parts:	AISI 304 (1.4301)
O-ring seals:	EPDM, FKM (Viton®), FEP, other grades upon request
Shutter:	PTFE

Surfaces

In contact with product:	Ra ≤ 32 µin (Ra ≤ 0,8 µm)

Temperature

Operating temperature:	230°F (110°C)
Short-term:	284°F (140°C) - optionally up to 392°F (200°C)

Operating pressure

Pressure behind arc:	145 psi (10 bar) - optionally up to 290.1psi (20 bar)
Pressure against arc:	43.5 psi (3 bar)

Versions

2-way

Actuator

Electro-pneumatic control unit consisting of:

- Pneumatic actuator 0°- 90°
- Positioner Positurn 4-20mA (0-10V), 24V DC, IP65

Valve connection

Clamp connection:	Tri-clamp
Welded ends:	Inch, DIN
Male ends:	DIN 11851

Further options / Certificates

- Linerarization insert - mechanical adaptation of control characteristic
- Electric actuator with MOD positioner 4-20mA (0-10V), 220 - 240V, 50/60Hz / IP65 / 0°- 90° (110V AC-version upon request)
- Shutter material; alternatively: PTFE+15% Peek , Tecapeek®
- Heated version
- Leakage control of moving O-ring seal / steam barrier with ball-bearing supported selector shaft
- 3-A 51-01 and FDA compliance
- CRN

CONTROL ARC VALVES

Inch

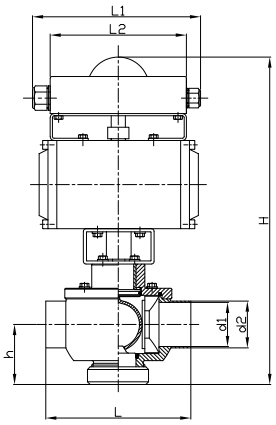

2-way control arc valve, pneumatic (air/air - air/spring), welded ends

VALVE SIZE inch (mm)	Type	Ød1	Ød2	H	h	L	L1	L2
1.00 (25.4)	**25C52Aep22**	0.87 (22.1)	1.00 (25.4)	13.03 (331)	1.97 (50)	4.33 (110)	7.80 (198)	6.06 (154)
1.50 (38.1)	**38C52Aep22**	1.37 (34.8)	1.50 (38.1)	14.33 (364)	2.56 (65)	5.51 (140)	7.80 (198)	6.06 (154)
2.00 (50.8)	**51C52Aep22**	1.87 (47.5)	2.00 (50.8)	14.57 (370)	2.76 (70)	6.46 (164)	7.80 (198)	6.06 (154)
2.50 (63.5)	**63C52Aep22**	2.37 (60.2)	2.50 (63.5)	16.26 (413)	2.95 (75)	8.27 (210)	7.80 (198)	6.06 (154)
3.00 (76.2)	**76C52Aep22**	2.87 (72.9)	3.00 (76.2)	16.89 (429)	3.15 (80)	8.66 (220)	7.80 (198)	6.06 (154)
4.00 (101.6)	**102C52Aep22**	3.83 (97.4)	4.00 (101.6)	18.31 (465)	4.33 (110)	12.20 (310)	7.80 (198)	6.06 (154)

Electro-pneumatic control unit consisting of:
- Pneumatic actuator 0°- 90°
- Positioner Positurn 4-20mA (0-10V), 24V DC, IP65

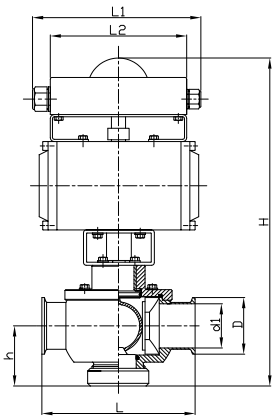

2-way control arc valve, pneumatic (air/air - air/spring), TC-clamp

VALVE SIZE inch (mm)	Type	Ød1	ØD	H	h	L	L1	L2
1.00 (25.4)	**25C520Aep22**	0.87 (22.1)	1.99 (50.5)	13.03 (331)	1.97 (50)	5.31 (135)	7.80 (198)	6.06 (154)
1.50 (38.1)	**38C520Aep22**	1.37 (34.8)	1.99 (50.5)	14.33 (364)	2.56 (65)	6.50 (165)	7.80 (198)	6.06 (154)
2.00 (50.8)	**51C520Aep22**	1.87 (47.5)	2.52 (64.0)	14.57 (370)	2.76 (70)	7.44 (189)	7.80 (198)	6.06 (154)
2.50 (63.5)	**63C520Aep22**	2.37 (60.2)	3.05 (77.5)	16.26 (413)	2.95 (75)	9.25 (235)	7.80 (198)	6.06 (154)
3.00 (76.2)	**76C520Aep22**	2.87 (72.9)	3.58 (91.0)	16.89 (429)	3.15 (80)	9.65 (245)	7.80 (198)	6.06 (154)
4.00 (101.6)	**102C520Aep22**	3.83 (97.4)	4.68 (119.0)	18.31 (465)	4.33 (110)	13.19 (335)	7.80 (198)	6.06 (154)

Electro-pneumatic control unit consisting of:
- Pneumatic actuator 0°- 90°
- Positioner Positurn 4-20mA (0-10V), 24V DC, IP65

4.2 Venturi Powder Control Valve

LIAG® Venturi powder control valves are designed to enable smooth flow of powder through the valve, the middle port is orientated at a 135°/45° angle to the straight through passage.

The Y-arrangement of the inlet creates the ideal flow and vacuum exhaust characteristics for proportioning and dosing.

This allows for a complete full bore without reducing the nominal diameter as often experienced with the use of a butterfly valve.

Furthermore the Venturi powder control valve can substitute up to two butterfly valves, which improves the operating control of the unit.

Features

- Totally clear passage - no pressure loss
- No dead pockets
- No product retention or sticking of solid particles
- Can be completely dismantled for easy service even when welded in place
- Identical wearing and spare parts as arc valves

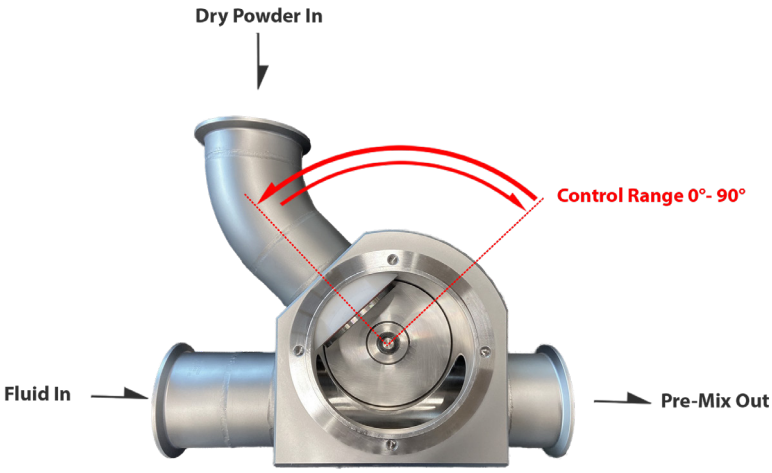

4

Technical Data Overview

Nominal sizes	
Inch:	1.5" / 2" / 2.5" / 3" / 4"
Materials	
Inox parts in contact with product:	AISI 316L (1.4404 / 1.4435)
Other inox parts:	AISI 304 (1.4301)
O-ring seals:	EPDM, FKM (Viton®), FEP, other grades upon request
Shutter:	PTFE
Surfaces	
In contact with product:	Ra ≤ 32 µin (Ra ≤ 0,8 µm)
Temperature	
Operating temperature:	230°F (110°C)
Short-term:	284°F (140°C) - optionally up to 392°F (200°C)
Operating pressure	
Pressure behind arc:	145 psi (10 bar) - optionally up to 290.1psi (20 bar)
Pressure against arc:	43.5 psi (3 bar)
Versions	
3-way	
Operation	
Manual:	with handle (4 locking positions)
Pneumatic:	• Vertical pneumatic actuator (AISI 304) • Horizontal pneumatic actuator (aluminium housing)
Valve connection	
Clamp connection:	Tri-clamp
Welded ends:	Inch, DIN
Male ends:	DIN 11851

Further options

- Shutter material; alternatively: PTFE+15% Peek , Tecapeek®
- Combination of different types of connection
- Delivery and adaptation to actuators of different manufacture per Namur NE14 and DIN EN ISO 5211
- 3-A 51-01 and FDA compliance

VENTURI VALVE

Inch

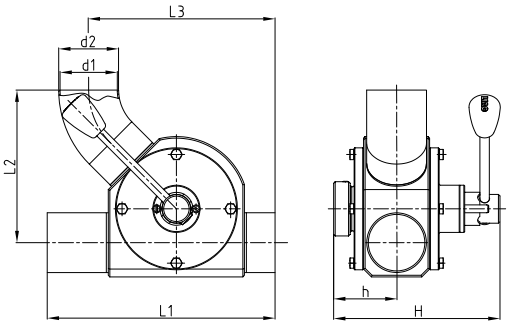

Venturi arc valve, manual, welded ends

VALVE SIZE inch (mm)	Type	Ød1	Ød2	H	h	L1	L2	L3
1.50 (38.1)	**38CY53M19**	1.37 (34.8)	1.50 (38.1)	7.13 (181)	2.60 (66)	6.14 (156)	4.69 (119)	5.71 (145)
2.00 (50.8)	**51CY53M19**	1.87 (47.5)	2.00 (50.8)	7.36 (187)	2.72 (69)	7.52 (191)	5.75 (146)	6.73 (171)
2.50 (63.5)	**63CY53M19**	2.37 (60.2)	2.50 (63.5)	7.07 (198)	2.83 (72)	8.98 (228)	6.93 (176)	8.50 (216)
3.00 (76.2)	**76CY53M19**	2.87 (72.9)	3.00 (76.2)	8.31 (211)	3.15 (80)	9.76 (248)	7.64 (194)	9.29 (236)
4.00 (101.6)	**102CY53M19**	3.83 (97.4)	4.00 (101.6)	10.16 (258)	4.06 (103)	13.86 (352)	9.09 (231)	11.46 (291)

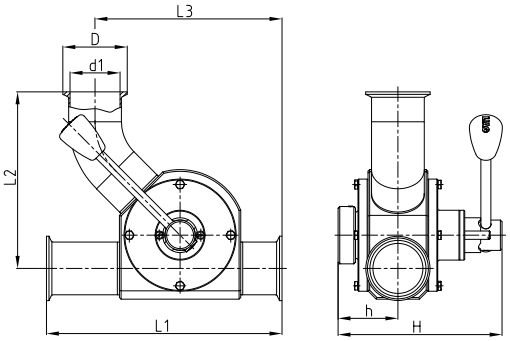

Venturi arc valve, manual, TC-clamp

VALVE SIZE inch (mm)	Type	Ød1	ØD	H	h	L1	L2	L3
1.50 (38.1)	**38CY530M19**	1.37 (34.8)	1.99 (50.5)	7.13 (181)	2.60 (66)	6.22 (158)	5.51 (140)	5.75 (146)
2.00 (50.8)	**51CY530M19**	1.87 (47.5)	2.52 (64)	7.36 (187)	2.72 (69)	8.86 (225)	6.34 (161)	7.40 (188)
2.50 (63.5)	**63CY530M19**	2.37 (60.2)	3.05 (77.5)	7.07 (198)	2.83 (72)	11.14 (283)	8.39 (213)	8.86 (225)
3.00 (76.2)	**76CY530M19**	2.87 (72.9)	3.58 (91)	8.31 (211)	3.15 (80)	12.01 (305)	8.46 (215)	9.65 (245)
4.00 (101.6)	**102CY530M19**	3.83 (97.4)	4.66 (119)	10.16 (258)	4.06 (103)	15.56 (395)	9.96 (253)	12.32 (313)

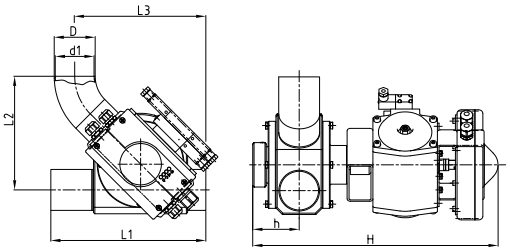

Venturi control arc valve, (air/air - air/spring), welded ends

VALVE SIZE inch (mm)	Type	Ød1	ØD	H	h	L1	L2	L3
1.50 (38.1)	**38CY53AbC19**	1.37 (34.8)	1.50 (38.1)	14.37 (365)	2.60 (66)	6.14 (156)	4.69 (119)	5.71 (145)
2.00 (50.8)	**51CY53AbC19**	1.87 (47.5)	2.00 (50.8)	14.61 (371)	2.72 (69)	7.52 (191)	5.47 (139)	6.97 (177)
2.50 (63.5)	**63CY53AbC19**	2.37 (60.2)	2.50 (63.5)	15.00 (381)	2.83 (72)	8.98 (228)	6.93 (176)	8.50 (216)
3.00 (76.2)	**76CY53AbC19**	2.87 (72.9)	3.00 (76.2)	16.22 (412)	3.15 (80)	9.76 (248)	7.64 (194)	9.29 (236)
4.00 (101.6)	**102CY53AbC19**	3.83 (97.4)	4.00 (101.6)	18.94 (481)	4.06 (103)	13.86 (352)	9.09 (231)	11.46 (291)

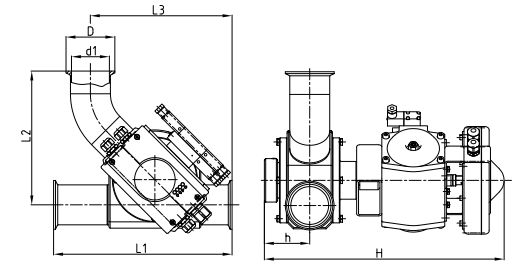

Venturi control arc valve, (air/air - air/spring), TC-clamp

VALVE SIZE inch (mm)	Type	Ød1	ØD	H	h	L1	L2	L3
1.50 (38.1)	**38CY530AbC19**	1.37 (34.8)	1.99 (50.5)	14.37 (365)	2.60 (66)	6.22 (158)	5.51 (140)	5.75 (146)
2.00 (50.8)	**51CY530AbC19**	1.87 (47.5)	2.52 (64)	14.61 (371)	2.72 (69)	8.86 (225)	6.34 (161)	7.40 (188)
2.50 (63.5)	**63CY530AbC19**	2.37 (60.2)	3.05 (77.5)	15.00 (381)	2.83 (72)	11.14 (283)	8.39 (213)	8.86 (225)
3.00 (76.2)	**76CY530AbC19**	2.87 (72.9)	3.58 (91)	16.22 (412)	3.15 (80)	12.01 (305)	8.46 (215)	9.65 (245)
4.00 (101.6)	**102CY530M19**	3.83 (97.4)	4.66 (119)	18.94 (481)	4.06 (103)	15.56 (395)	9.96 (253)	12.32 (313)

4.3 EASY-OPEN Arc Valve for the Meat Industry

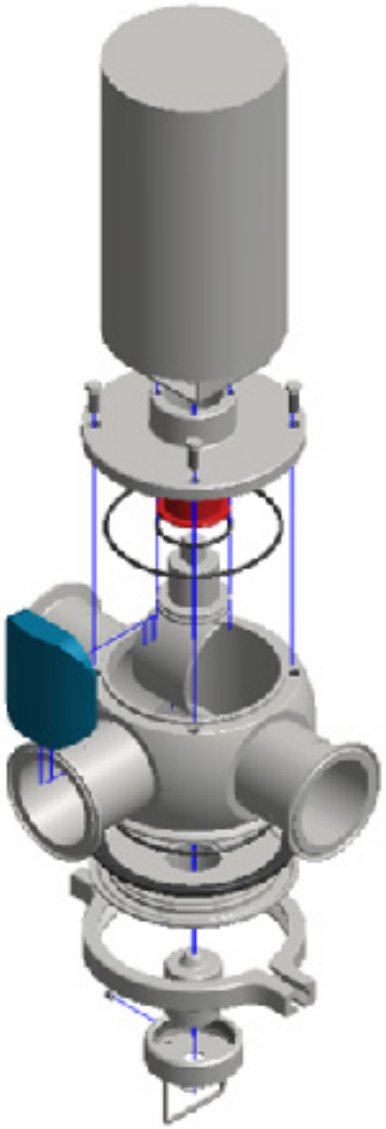

LIAG® EASY-OPEN arc valves are specially designed as reliable component of inline metal detectors and process lines in the meat industry without CIP cleaning. This valve performs easy and quick opening for manual cleaning (COP).

Features

- Hygienic design - no dead pockets
- Totally clear passage - no pressure loss
- Minimum number of components and wearing parts
- EASY OPEN design for fast opening even when built in

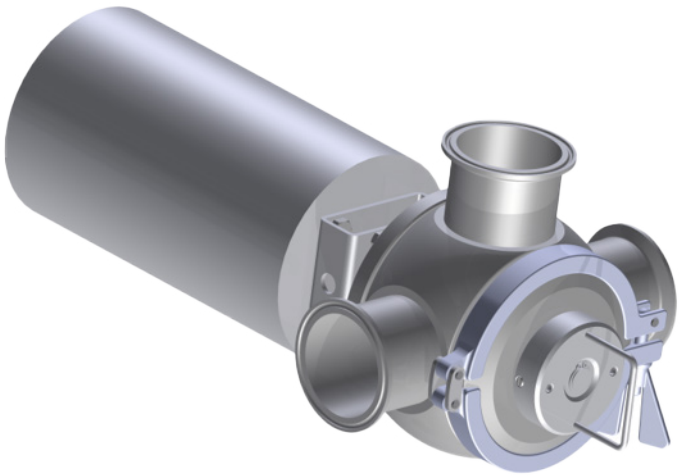

Technical Data Overview

Nominal sizes	
Inch:	2" / 2.5" / 3"
Materials	
Inox parts in contact with product:	AISI 316L (1.4404 / 1.4435)
Other inox parts:	AISI 304 (1.4301)
O-ring seals:	EPDM, FKM (Viton®), FEP, other grades upon request
Shutter:	PTFE
Surfaces	
In contact with product:	Ra ≤ 32 µin (Ra ≤ 0,8 µm)
Temperature	
Operating temperature:	230°F (110°C)
Short-term:	284°F (140°C) - optionally up to 392°F (200°C)
Operating pressure	
Pressure behind arc:	145 psi (10 bar) - optionally up to 290.1psi (20 bar)
Pressure against arc:	43.5 psi (3 bar)
Versions	
2-way / 3-way	
Operation	
Pneumatic:	• Vertical pneumatic actuator (AISI 304) • Horizontal pneumatic actuator (aluminium housing)
Valve connection	
Clamp connection:	Tri-clamp
Welded ends:	Inch, DIN
Male ends:	DIN 11851

Further options

- Shutter material; alternatively: PTFE+15% Peek, Tecapeek®
- Combination of different types of connection
- Delivery and adaptation to actuators of different manufacture per Namur NE14 and DIN EN ISO 5211

4.4 Leakage control of the moving O-ring seal of Arc Valves

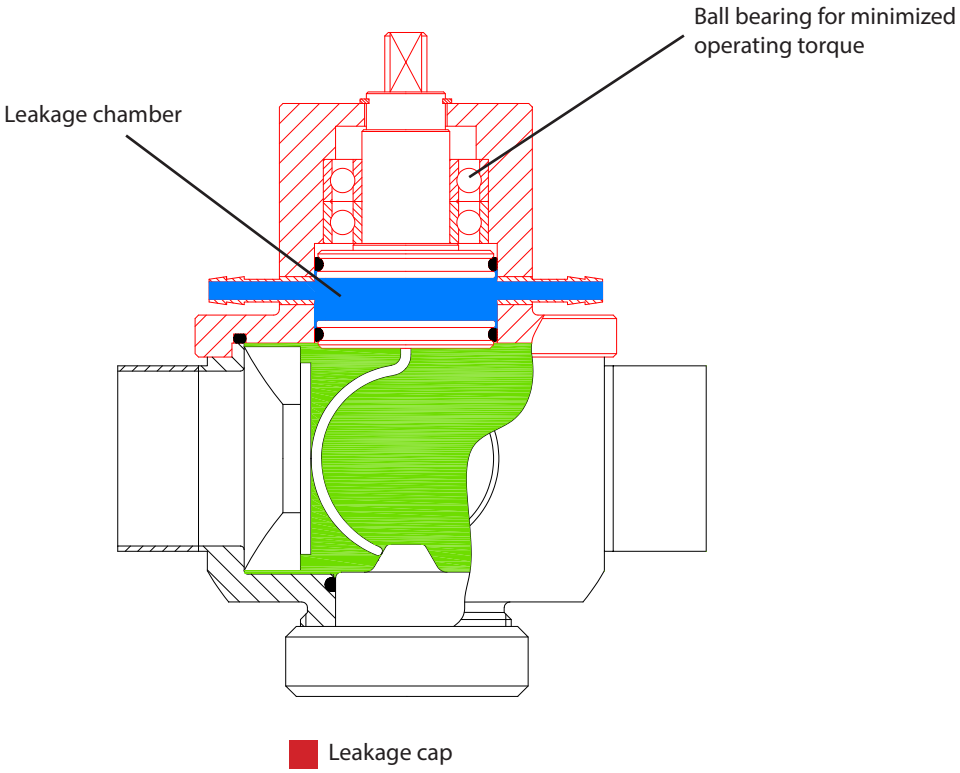

For maximum product safety, LIAG® free flow arc valves are available with a leakage monitoring system of the only dynamic O-ring. The specific design identifies possible wearing defects of the seal and prevents any contamination from the outside environment.

The special designed leakage chamber can act as a steam barrier or offer monitoring via means of a level conductor control (dilution of glycerine). The pivoting axle is supported with a ball-bearing shaft for increased radial stability and 80% less required operating torque compared with the standard arc valve.

Features

- Maximum product safety for aseptic processes
- No contamination from the outside environment by as a result of excessive wearing or a defective stem o-ring seal
- Quick acting valve due to low operating torque requirements (ball bearing supported main shaft)
- Able to be retrofit to arc valves
- 1.5" - 3"

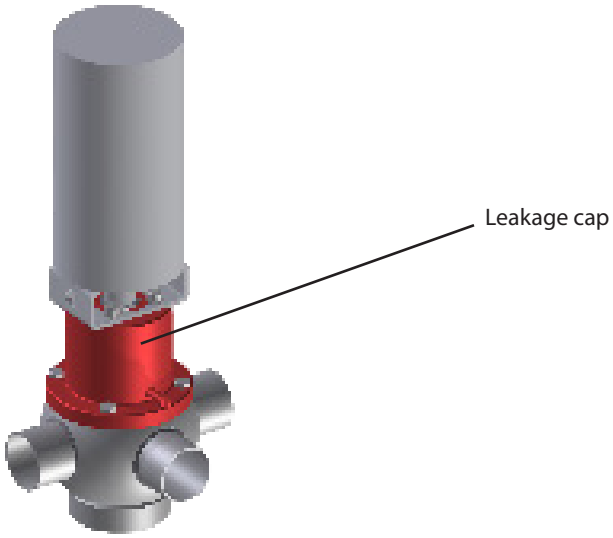

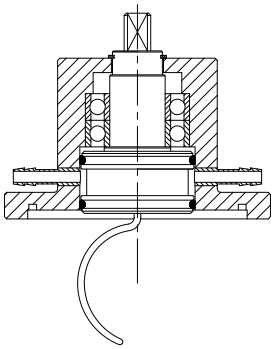

Leakage cap with ball bearing supported selector shaft and leakage control of the moving O-ring seal

VALVE SIZE inch (mm)	Type
1.50 (38.1)	**38-40SD510**
2.00 (50.8)	**50-51SD510**
2.50 (63.5)	**63S510**
3.00 (76.2)	**65-76SD510**

4

4.5 Flush Bottom Tank Outlet Valve

The clean solution

LIAG® Flush Bottom Tank Outlet Valves have been designed according to hygienic design guidelines to meet the high demands of process engineering applications.

These valves are very important elements in vessel construction. LIAG® Flush Bottom Tank Outlet Valves are installed at the lowest point of a vessel. They are particularly suited for products and fluids containing solid particles on account of a totally clear passage without pressure loss, as well as easy and thorough cleaning in place (CIP).
LIAG® tank outlet valves are designed with a flange for a direct welding into the vessels bottom.

Features

- No dead pockets
- CIP/SIP capability (hygienic design)
- Product-friendly drainage due totally clear passage without pressure loss
- No product remainders or sticking of solid particles
- Minimum number of components and wearing parts (same as Arc Valves)
- Can be completely dismantled even when welded into the vessels bottom for easy servicing
- 3-A 51-01 and FDA compliance
- CRN

4

Flow Rate of LIAG® Flush Bottom Tank Outlet Valves

Flow Rate of LIAG® Flush Bottom Tank Outlet Valve		
1"	264.17 gpm	60 m³/h
1.5"	616.40 gpm	140 m³/h
2"	1496.97 gpm	340 m³/h
2.5"	1805.18 gpm	410 m³/h
3"	1981.29 gpm	450 m³/h
4"	4358.84 gpm	990 m³/h

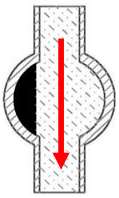

FLUSH BOTTOM TANK OUTLET VALVE

Inch

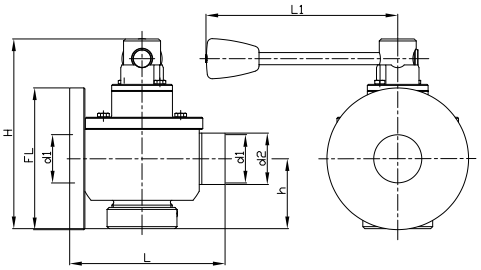

2-way tank outlet valve series 22, manual, flush bottom / welded end

VALVE SIZE inch (mm)	Type	Ød1	Ød2	ØFL	H	h	L	L1
1.00 (25.4)	**25CT52M22**	0.87 (22.2)	1.00 (25.4)	5.51 (140)	5.71 (145)	1.97 (50)	4.25 (108)	6.30 (160)
1.50 (38.1)	**38CT52M22**	1.37 (34.9)	1.5 (38.1)	5.51 (140)	7.09 (180)	2.56 (65)	5.20 (132)	6.30 (160)
2.00 (50.8)	**51CT52M22**	1.87 (47.5)	2.00 (50.8)	5.51 (140)	7.48 (190)	2.76 (70)	6.06 (154)	7.48 (190)
2.50 (63.5)	**63CT52M22**	2.37 (60.2)	2.50 (63.5)	5.51 (140)	7.87 (200)	2.95 (75)	7.28 (185)	7.48 (190)
3.00 (76.2)	**76CT52M22**	2.87 (72.9)	3.00 (76.2)	5.51 (140)	8.45 (215)	3.15 (80)	7.80 (198)	7.48 (190)
4.00 (101.6)	**102CT52M22**	3.83 (97.4)	4.00 (101.6)	5.51 (140)	10.43 (265)	4,33 (110)	9.72 (247)	10.63 (270)

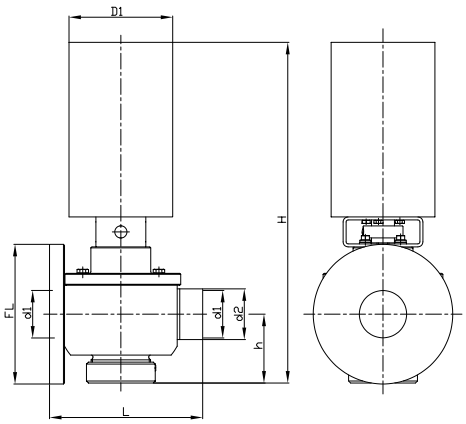

2-way tank outlet valve series 22, pneumatic, flush bottom / welded end

VALVE SIZE inch (mm)	Type	Ød1	Ød2	ØFL	H	h	L	ØD1
1.00 (25.4)	**25CT52A22**	0.87 (22.2)	1.00 (25.4)	5.51 (140)	11.81 (300)	1.97 (50)	4.25 (108)	3.50 (89)
1.50 (38.1)	**38CT52A22**	1.37 (34.9)	1.5 (38.1)	5.51 (140)	13.19 (335)	2.56 (65)	5.20 (132)	3.50 (89)
2.00 (50.8)	**51CT52A22**	1.87 (47.5)	2.00 (50.8)	5.51 (140)	13.39 (340)	2.76 (70)	6.06 (154)	4.10 (104)
2.50 (63.5)	**63CT52A22**	2.37 (60.2)	2.50 (63.5)	5.51 (140)	13.98 (355)	2.95 (75)	7.28 (185)	4.10 (104)
3.00 (76.2)	**76CT52A22**	2.87 (72.9)	3.00 (76.2)	5.51 (140)	16.61 (422)	3.15 (80)	7.80 (198)	5.08 (129)
4.00 (101.6)	**102CT52A22**	3.83 (97.4)	4.00 (101.6)	5.51 (140)	18.66 (474)	4,33 (110)	9.72 (247)	5.08 (129)

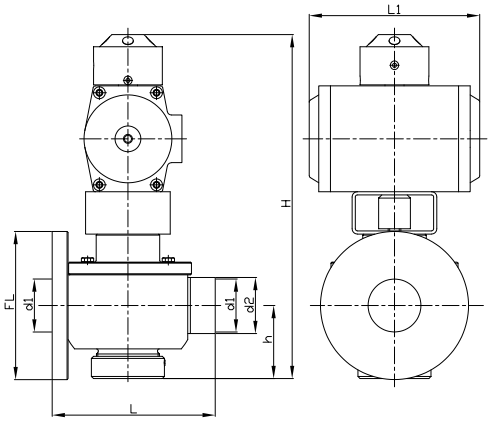

2-way tank outlet valve series 22, pneumatic, flush bottom / welded end

VALVE SIZE inch (mm)	Type	Ød1	Ød2	ØFL	H	h	L	L1
1.00 (25.4)	**25CT52Ab22**	0.87 (22.2)	1.00 (25.4)	5.51 (140)	11.30 (287)	1.97 (50)	4.25 (108)	6.34 (161)
1.50 (38.1)	**38CT52Ab22**	1.37 (34.9)	1.5 (38.1)	5.51 (140)	12.60 (320)	2.56 (65)	5.20 (132)	6.34 (161)
2.00 (50.8)	**51CT52Ab22**	1.87 (47.5)	2.00 (50.8)	5.51 (140)	12.91 (328)	2.76 (70)	6.06 (154)	6.34 (161)
2.50 (63.5)	**63CT52Ab22**	2.37 (60.2)	2.50 (63.5)	5.51 (140)	13.46 (342)	2.95 (75)	7.28 (185)	6.34 (161)
3.00 (76.2)	**76CT52Ab22**	2.87 (72.9)	3.00 (76.2)	5.51 (140)	14.57 (370)	3.15 (80)	7.80 (198)	8.23 (209)
4.00 (101.6)	**102CT52Ab22**	3.83 (97.4)	4.00 (101.6)	5.51 (140)	16.65 (423)	4,33 (110)	9.72 (247)	8.23 (209)

FLUSH BOTTOM TANK OUTLET VALVE

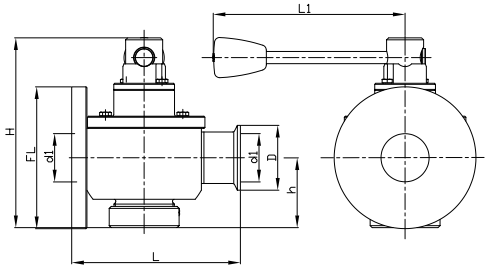

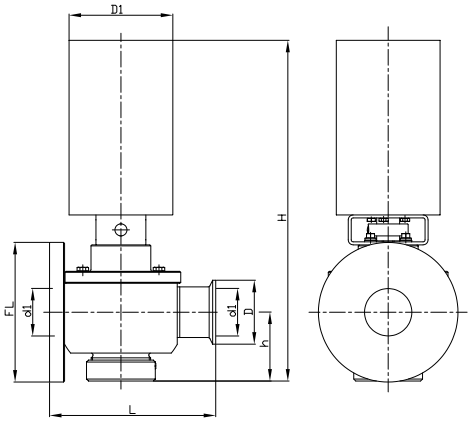

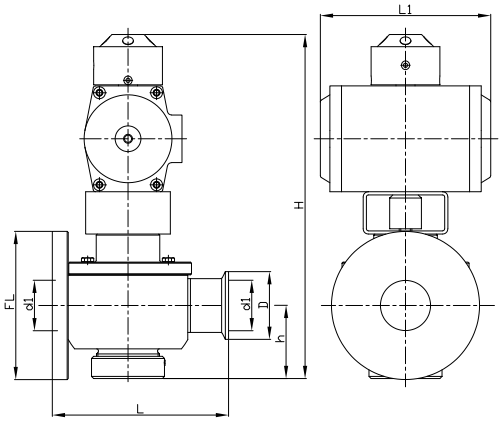

Inch

2-way tank outlet valve series 22, manual, flush bottom / TC-clamp

VALVE SIZE inch (mm)	Type	Ød1	ØD	ØFL	H	h	L	L1
1.00 (25.4)	**25CT520M22**	0.87 (22.2)	19.88 (50.5)	5.51 (140)	5.71 (145)	1.97 (50)	4.76 (121)	6.30 (160)
1.50 (38.1)	**38CT520M22**	1.37 (34.9)	19.88 (50.5)	5.51 (140)	7.09 (180)	2.56 (65)	5.71 (145)	6.30 (160)
2.00 (50.8)	**51CT520M22**	1.87 (47.5)	2.52 (64.0)	5.51 (140)	7.48 (190)	2.76 (70)	6.57 (167)	7.48 (190)
2.50 (63.5)	**63CT520M22**	2.37 (60.2)	3,05 (77.5)	5.51 (140)	7.87 (200)	2.95 (75)	7.80 (198)	7.48 (190)
3.00 (76.2)	**76CT520M22**	2.87 (72.9)	3.58 (91)	5.51 (140)	8.45 (215)	3.15 (80)	8.31 (211)	7.48 (190)
4.00 (101.6)	**102CT520M22**	3.83 (97.4)	4.68 (119)	5.51 (140)	10.43 (265)	4,33 (110)	10.24 (260)	10.63 (270)

2-way tank outlet valve series 22, pneumatic, flush bottom / TC-clamp

VALVE SIZE inch (mm)	Type	Ød1	ØD	ØFL	H	h	L	ØD1
1.00 (25.4)	**25CT520A22**	0.87 (22.2)	19.88 (50.5)	5.51 (140)	11.81 (300)	1.97 (50)	4.76 (121)	3.50 (89)
1.50 (38.1)	**38CT520A22**	1.37 (34.9)	19.88 (50.5)	5.51 (140)	13.19 (335)	2.56 (65)	5.71 (145)	3.50 (89)
2.00 (50.8)	**51CT520A22**	1.87 (47.5)	2.52 (64.0)	5.51 (140)	13.39 (340)	2.76 (70)	6.57 (167)	4.10 (104)
2.50 (63.5)	**63CT520A22**	2.37 (60.2)	3,05 (77.5)	5.51 (140)	13.98 (355)	2.95 (75)	7.80 (198)	4.10 (104)
3.00 (76.2)	**76CT520A22**	2.87 (72.9)	3.58 (91)	5.51 (140)	16.61 (422)	3.15 (80)	8.31 (211)	5.08 (129)
4.00 (101.6)	**102CT520A22**	3.83 (97.4)	4.68 (119)	5.51 (140)	18.66 (474)	4,33 (110)	10.24 (260)	5.08 (129)

2-way tank outlet valve series 22, pneumatic, flush bottom / TC-clamp

VALVE SIZE inch (mm)	Type	Ød1	ØD	ØFL	H	h	L	L1
1.00 (25.4)	**25CT520Ab22**	0.87 (22.2)	19.88 (50.5)	5.51 (140)	11.30 (287)	1.97 (50)	4.76 (121)	6.34 (161)
1.50 (38.1)	**38CT520Ab22**	1.37 (34.9)	19.88 (50.5)	5.51 (140)	12.60 (320)	2.56 (65)	5.71 (145)	6.34 (161)
2.00 (50.8)	**51CT520Ab22**	1.87 (47.5)	2.52 (64.0)	5.51 (140)	12.91 (328)	2.76 (70)	6.57 (167)	6.34 (161)
2.50 (63.5)	**63CT520Ab22**	2.37 (60.2)	3,05 (77.5)	5.51 (140)	13.46 (342)	2.95 (75)	7.80 (198)	6.34 (161)
3.00 (76.2)	**76CT520Ab22**	2.87 (72.9)	3.58 (91)	5.51 (140)	14.57 (370)	3.15 (80)	8.31 (211)	8.23 (209)
4.00 (101.6)	**102CT520Ab22**	3.83 (97.4)	4.68 (119)	5.51 (140)	16.65 (423)	4,33 (110)	10.24 (260)	8.23 (209)

Technical Data Overview

Nominal sizes Inch:	1" / 1.5" / 2" / 2.5" / 3" / 4"
Materials Inox parts in contact with product: Other inox parts: O-ring seals: Shutter:	 AISI 316L (1.4404 / 1.4435) AISI 304 (1.4301) EPDM, FKM (Viton®), FEP, other grades upon request PTFE
Surfaces In contact with product:	Ra ≤ 32µin (Ra ≤ 0.8µm)
Temperature Operating temperature: Short-term:	 230°F (110°C) 284°F (140°C) - optionally up to 392°F (200°C)
Operating pressure Pressure behind arc: Pressure against arc:	 145 psi (10 bar) – optionally up to 290.1 psi (20 bar) 43.5 psi (3 bar)
Versions	2-way
Operation Manual: Pneumatic:	 with handle • Vertical pneumatic actuator (AISI 304) • Horizontal pneumatic actuator (aluminium housing)
Valve connection (outlet) Clamp connection: Welded ends:	 Tri-clamp Inch
Installation	With flange for welding into the vessels bottom

Further options / Certificates

- Shutter material; alternatively: PTFE+15% Peek, Tecapeek®
- Delivery and adaptation to actuators of different manufacture per Namur NE14 and DIN EN ISO5211
- 3-A 51-01 and FDA compliance
- CRN

Spare Parts and Accessories to chapter 2, 3 and 4

LIAG® Free Flow Arc Valve - chapter 2

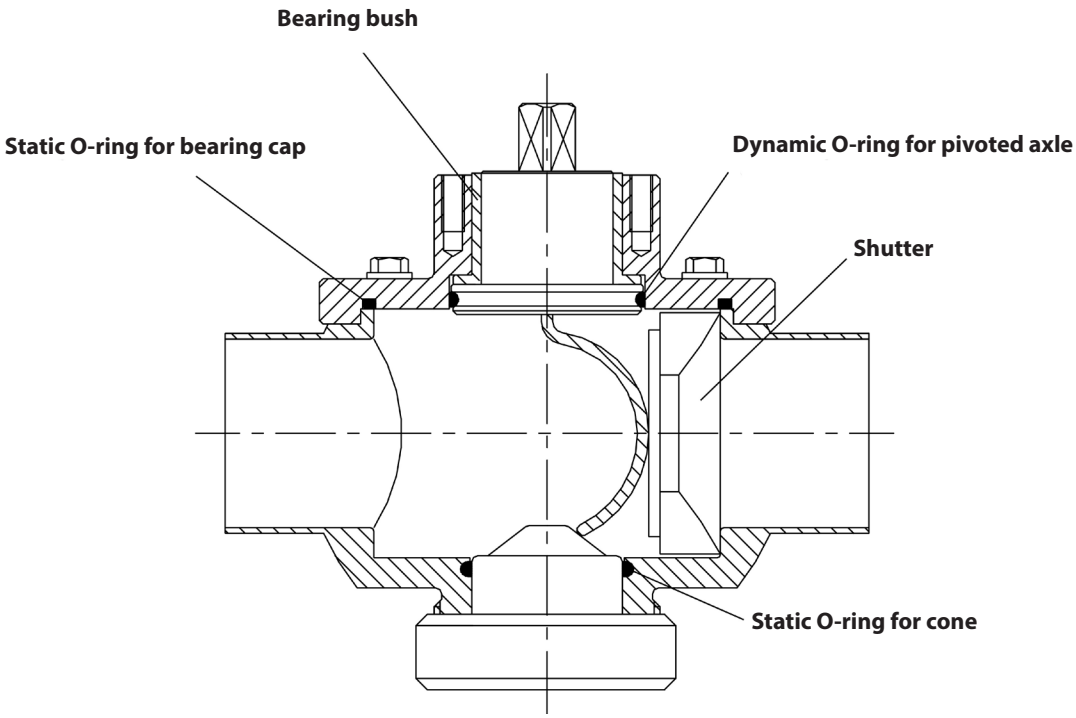

LIAG® Pig Diverter Arc Valve - chapter 3

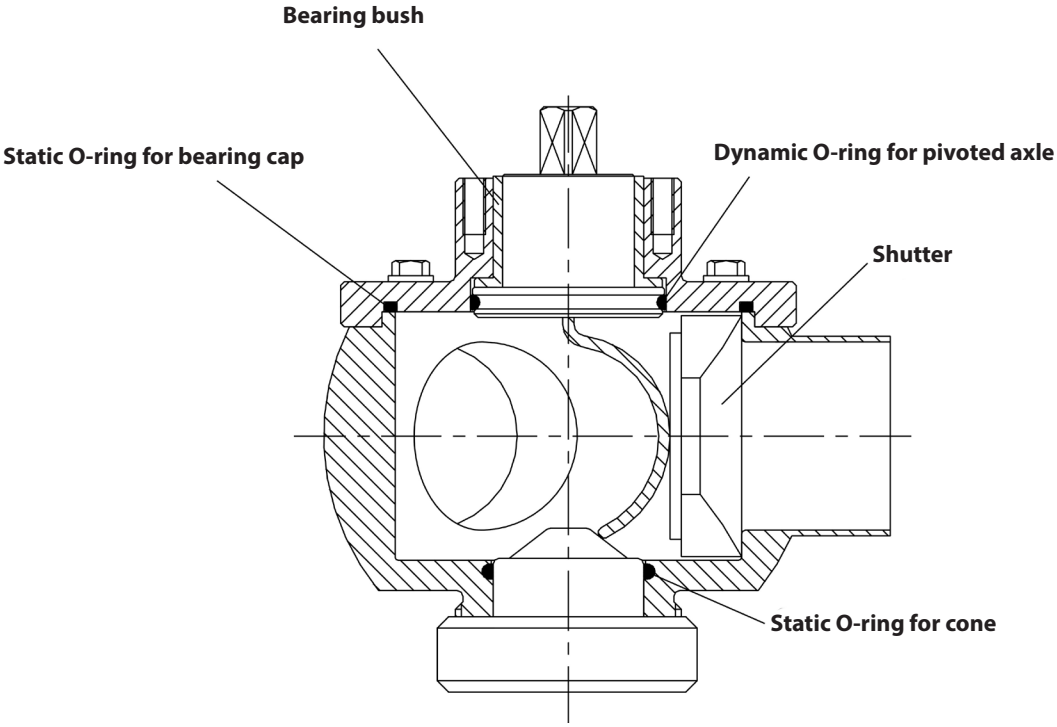

SPARE PARTS AND ACCESSORIES

For arc valves - chapter 2 and 3

O-ring set EPDM / FKM (Viton®)
Consists of:
1x O-ring for pivoted axle*
1x O-ring for bearing cap
1x O-ring for cone

EPDM O-ring set

VALVE SIZE inch (mm)	Type
1.00 (25.4)	25SD502S22E
1.50 (38.1)	38-40SD502S22E
2.00 (50.8)	50-51SD502S22E
2.50 (63.5)	63S502S22E
3.00 (76.2)	65-76SD502S22E
4.00 (101.6)	100-102SD502S22E
6.00 (152.4)	150D502E

FKM (Viton®) O-ring set

VALVE SIZE inch (mm)	Type
1.00 (25.4)	25SD502S22V
1.50 (38.1)	38-40SD502S22V
2.00 (50.8)	50-51SD502S22V
2.50 (63.5)	63S502S22V
3.00 (76.2)	65-76SD502S22V
4.00 (101.6)	100-102SD502S22V
6.00 (152.4)	150D502V

O-ring set FEP
Consists of:
1x O-ring for pivoted axle*
1x O-ring for bearing cap
1x O-ring for cone

FEP O-ring set

VALVE SIZE inch (mm)	Type
1.00 (25.4)	25SD502S22FEP
1.50 (38.1)	38-40SD502S22FEP
2.00 (50.8)	50-51SD502S22FEP
2.50 (63.5)	63S502S22FEP
3.00 (76.2)	65-76SD502S22FEP
4.00 (101.6)	100-102SD502S22FEP
6.00 (152.4)	150D502FEP

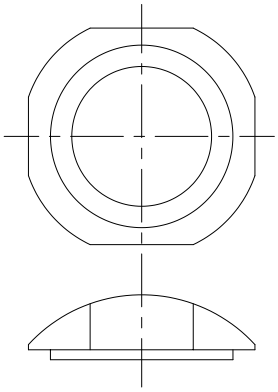

PTFE shutter

VALVE SIZE inch (mm)	Type
1.00 (25.4)	25SD501T
1.50 (38.1)	38-40SD501T
2.00 (50.8)	50-51SD501T
2.50 (63.5)	63S501T
3.00 (76.2)	65-76SD501T
4.00 (101.6)	100-102SD501T
6.00 (152.4)	150D501T

PTFE+15% Peek shutter

VALVE SIZE inch (mm)	Type
1.00 (25.4)	25SD501TP
1.50 (38.1)	38-40SD501TP
2.00 (50.8)	50-51SD501TP
2.50 (63.5)	63S501TP
3.00 (76.2)	65-76SD501TP
4.00 (101.6)	100-102SD501TP
6.00 (152.4)	upon request

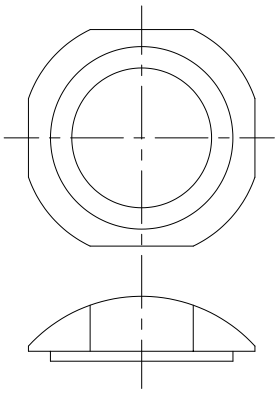

Tecapeek® shutter

VALVE SIZE inch (mm)	Type
1.00 (25.4)	25SD501P
1.50 (38.1)	38-40SD501P
2.00 (50.8)	50-51SD501P
2.50 (63.5)	63S501P
3.00 (76.2)	65-76SD501P
4.00 (101.6)	100-102SD501P

*Please note:

For arc valves with "leakage control of the moving O-ring seal" (chapter 4.4), the O-ring set contains two O-rings for the pivoted axle.

SPARE PARTS AND ACCESSORIES

For arc valves - chapter 2 and 3

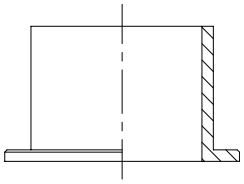

Bearing bush POM (Polyacetal)

VALVE SIZE inch (mm)	Type
1.00 (25.4)	**25SD503**
1.50 (38.1)	**38-80SD503**
2.00 (50.8)	**38-80SD503**
2.50 (63.5)	**38-80SD503**
3.00 (76.2)	**38-80SD503**
4.00 (101.6)	**100-102SD503**
6.00 (152.4)	**150D503**

Bearing bush PTFE

VALVE SIZE inch (mm)	Type
1.00 (25.4)	**25SD503T**
1.50 (38.1)	**38-80SD503T**
2.00 (50.8)	**38-80SD503T**
2.50 (63.5)	**38-80SD503T**
3.00 (76.2)	**38-80SD503T**
4.00 (101.6)	**100-102SD503T**
6.00 (152.4)	**150D503T**

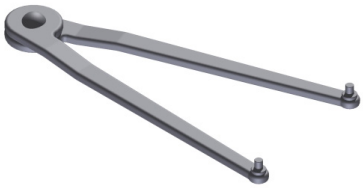

Assembling tool for the pinch nut

VALVE SIZE inch (mm)	Type
1.00 (25.4)	**25-150SL**
1.50 (38.1)	**25-150SL**
2.00 (50.8)	**25-150SL**
2.50 (63.5)	**25-150SL**
3.00 (76.2)	**25-150SL**
4.00 (101.6)	**25-150SL**
6.00 (152.4)	**25-150SL**

SPARE PARTS AND ACCESSORIES

For arc valves - chapter 2 only

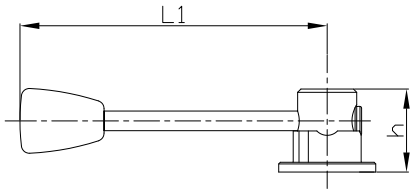

Standard handle, 4 x 90°

VALVE SIZE inch (mm)	Type	L1	h
1.00 (25.4)	**25-40SD506-90**	6.30 (160)	2.01 (51)
1.50 (38.1)	**25-40SD506-90**	6.30 (160)	2.01 (51)
2.00 (50.8)	**50-63SD506-90**	7.48 (190)	2.01 (51)
2.50 (63.5)	**50-63SD506-90**	7.48 (190)	2.01 (51)
3.00 (76.2)	**65-80SD506-90**	7.48 (190)	2.01 (51)
4.00 (101.6)	**100-102SD506-90**	10.63 (270)	2.01 (51)
6.00 (152.4)	**150D506-90**	10.63 (270)	2.01 (51)

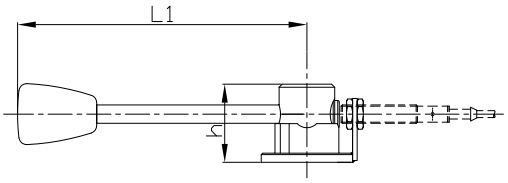

Standard handle with feedback bracket M12, 0°- 90°

VALVE SIZE inch (mm)	Type	L1	h
1.00 (25.4)	**25-40SD506-90R**	6.30 (160)	2.01 (51)
1.50 (38.1)	**25-40SD506-90R**	6.30 (160)	2.01 (51)
2.00 (50.8)	**50-63SD506-90R**	7.48 (190)	2.01 (51)
2.50 (63.5)	**50-63SD506-90R**	7.48 (190)	2.01 (51)
3.00 (76.2)	**65-80SD506-90R**	7.48 (190)	2.01 (51)
4.00 (101.6)	**100-102SD506-90R**	10.63 (270)	2.01 (51)
6.00 (152.4)	**150D506-90R**	10.63 (270)	2.01 (51)

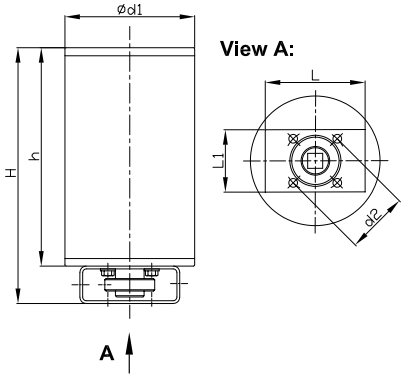

Vertical pneumatic actuator (AISI304), double acting 0° - 90° (air/air)

VALVE SIZE inch (mm)	Type	Ød1	Ød2	H	h	L	L1
1.00 (25.4)	**25-40KH002D**	3.50 (89)	1.97 (50)	8.07 (205)	6.89 (175)	3.15 (80)	1.97 (50)
1.50 (38.1)	**25-40KH002D**	3.50 (89)	1.97 (50)	8.07 (205)	6.89 (175)	3.15 (80)	1.97 (50)
2.00 (50.8)	**50-63KH004D**	4.09 (104)	1.97 (50)	8.07 (205)	6.89 (175)	3.15 (80)	1.97 (50)
2.50 (63.5)	**50-63KH004D**	4.09 (104)	1.97 (50)	8.07 (205)	6.89 (175)	3.15 (80)	1.97 (50)
3.00 (76.2)	**65-80KH006D**	5.08 (129)	1.97 (50)	10.24 (260)	9.06 (230)	3.15 (80)	2.76 (70)
4.00 (101.6)	**100-102KH006D**	5.08 (129)	2.76 (70)	10.24 (260)	9.06 (230)	3.15 (80)	2.76 (70)

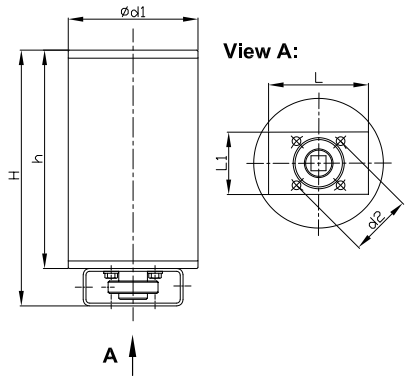

Vertical pneumatic actuator (AISI304), single acting 0°- 90° (air/spring return)

VALVE SIZE inch (mm)	Type	Ød1	Ød2	H	h	L	L1
1.00 (25.4)	**25-40KH002S**	3.50 (89)	1.97 (50)	8.07 (205)	6.89 (175)	3.15 (80)	1.97 (50)
1.50 (38.1)	**25-40KH002S**	3.50 (89)	1.97 (50)	8.07 (205)	6.89 (175)	3.15 (80)	1.97 (50)
2.00 (50.8)	**50-63KH004S**	4.09 (104)	1.97 (50)	8.07 (205)	6.89 (175)	3.15 (80)	1.97 (50)
2.50 (63.5)	**50-63KH004S**	4.09 (104)	1.97 (50)	8.07 (205)	6.89 (175)	3.15 (80)	1.97 (50)
3.00 (76.2)	**65-80KH006S**	5.08 (129)	1.97 (50)	10.24 (260)	9.06 (230)	3.15 (80)	2.76 (70)
4.00 (101.6)	**100-102LKLA L/F NO**	5.24 (133)	2.76 (70)	12.13 (308)	9.76 (248)	3.94 (100)	3.94 (100)

SPARE PARTS AND ACCESSORIES

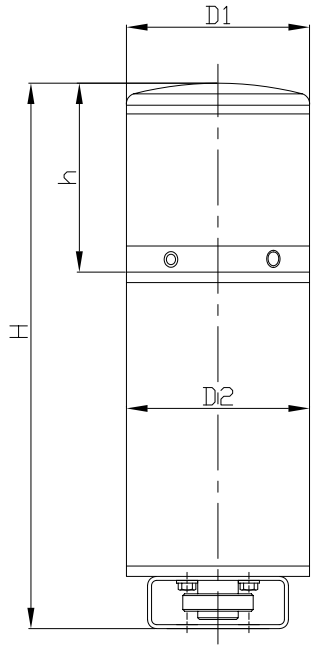

ASi or DeviceNet upon request

For arc valves - chapter 2 only

pneumatic actuator (AISI304), double acting 0° - 90° (air/air) with control unit TOP

VALVE SIZE inch (mm)	Type	ØD1	ØD2	H	h
1.00 (25.4)	**25-40KH002D TOP**	4.02 (102)	3.50 (89)	12.44 (316)	4.37 (111)
1.50 (38.1)	**25-40KH002D TOP**	4.02 (102)	3.50 (89)	12.44 (316)	4.37 (111)
2.00 (50.8)	**50-63KH004D TOP**	4.02 (102)	4.09 (104)	12.44 (316)	4.37 (111)
2.50 (63.5)	**50-63KH004D TOP**	4.02 (102)	4.09 (104)	12.44 (316)	4.37 (111)
3.00 (76.2)	**65-80KH006D TOP**	4.02 (102)	5.08 (129)	14.61 (371)	4.37 (111)
4.00 (101.6)	**100-102KH006D TOP**	4.02 (102)	5.08 (129)	14.61 (371)	4.37 (111)

Vertical pneumatic actuator (AISI304), single acting 0° - 90° (air/spring return) with control unit TOP

VALVE SIZE inch (mm)	Type	ØD1	ØD2	H	h
1.00 (25.4)	**25-40KH002S TOP**	4.02 (102)	3.50 (89)	12.44 (316)	4.37 (111)
1.50 (38.1)	**25-40KH002S TOP**	4.02 (102)	3.50 (89)	12.44 (316)	4.37 (111)
2.00 (50.8)	**50-63KH004S TOP**	4.02 (102)	4.09 (104)	12.44 (316)	4.37 (111)
2.50 (63.5)	**50-63KH004S TOP**	4.02 (102)	4.09 (104)	12.44 (316)	4.37 (111)
3.00 (76.2)	**65-80KH006S TOP**	4.02 (102)	5.08 (129)	14.61 (371)	4.37 (111)
4.00 (101.6)	**100-102LKLA TOP**	5.51 (140)	5.24 (133)	18.90 (480)	6.73 (171)

Set of gaskets for vertical pneumatic actuator 0° - 90°

VALVE SIZE inch (mm)	Type	Used for actuator
1.00 (25.4)	**25-40KH002DS**	double acting / single acting
1.50 (38.1)	**25-40KH002DS**	double acting / single acting
2.00 (50.8)	**50-63KH004DS**	double acting / single acting
2.50 (63.5)	**50-63KH004DS**	double acting / single acting
3.00 (76.2)	**65-102KH006DS**	double acting / single acting
4.00 (101.6)	**65-102KH006DS**	double acting
4.00 (101.6)	**65-102LKLASK**	single acting

SPARE PARTS AND ACCESSORIES

For arc valves - chapter 2 only

Inductive proximity switch M12, metal, 24V DC for vertical pneumatic actuator

VALVE SIZE inch (mm)	Type
1.00 (25.4)	25-102M55BSt
1.50 (38.1)	25-102M55BSt
2.00 (50.8)	25-102M55BSt
2.50 (63.5)	25-102M55BSt
3.00 (76.2)	25-102M55BSt
4.00 (101.6)	25-102M55BSt

Inductive proximity switch M12, metal, 8.2V DC for vertical pneumatic actuator, Ex

VALVE SIZE inch (mm)	Type
1.00 (25.4)	25-102M55ExSt
1.50 (38.1)	25-102M55ExSt
2.00 (50.8)	25-102M55ExSt
2.50 (63.5)	25-102M55ExSt
3.00 (76.2)	25-102M55ExSt
4.00 (101.6)	25-102M55ExSt

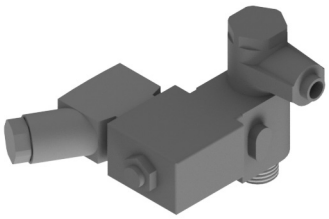

3/2 Solenoid valve with cable plug, for vertical pneumatic actuator

VALVE SIZE inch (mm)	Type		
1.00 (25.4)	25-63MVB24D	24V DC	G 1/8
	25-63MVB110A	110V AC	
	25-63MVB230A	230V AC	
1.50 (38.1)	25-63MVB24D	24V DC	G 1/8
	25-63MVB110A	110V AC	
	25-63MVB230A	230V AC	
2.00 (50.8)	25-63MVB24D	24V DC	G 1/8
	25-63MVB110A	110V AC	
	25-63MVB230A	230V AC	
2.50 (63.5)	25-63MVB24D	24V DC	G 1/8
	25-63MVB110A	110V AC	
	25-63MVB230A	230V AC	
3.00 (76.2)	65-102MVB24D	24V DC	G 1/4
	65-102MVB110A	110V AC	
	65-102MVB230A	230V AC	
4.00 (101.6)	65-102MVB24D	24V DC	G 1/4
	65-102MVB110A	110V AC	
	65-102MVB230A	230V AC	

SPARE PARTS AND ACCESSORIES

For arc valves - chapter 2 only

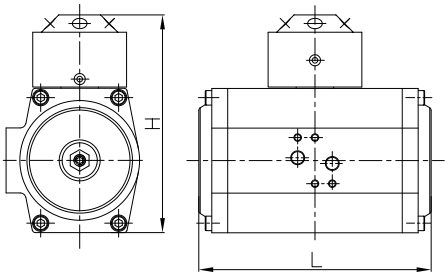

Horizontal pneumatic actuator (aluminium housing), double acting 0° - 90° (air/air)

VALVE SIZE inch (mm)	Type	L	H
1.00 (25.4)	**25-63KB50**	6.34 (161)	5.94 (151)
1.50 (38.1)	**25-63KB50**	6.34 (161)	5.94 (151)
2.00 (50.8)	**25-63KB50**	6.34 (161)	5.94 (151)
2.50 (63.5)	**25-63KB50**	6.34 (161)	5.94 (151)
3.00 (76.2)	**65-80KB50**	8.23 (209)	6.61 (168)
4.00 (101.6)	**100-102KB50**	8.23 (209)	6.61 (168)
6.00 (152.4)	**150KA50**	13.11 (333)	7.36 (187)

PTFE coated housing upon request

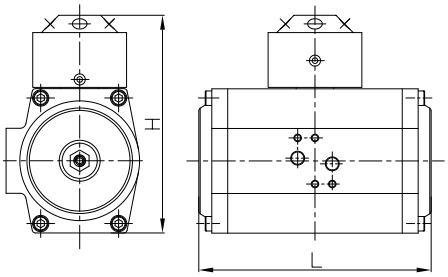

Horizontal pneumatic actuator (aluminium housing), single acting 0° - 90° (air/spring return)

VALVE SIZE inch (mm)	Type	L	H
1.00 (25.4)	**25KB51**	6.34 (161)	5.94 (151)
1.50 (38.1)	**38-51KB51**	6.34 (161)	5.94 (151)
2.00 (50.8)	**38-51KB51**	6.34 (161)	5.94 (151)
2.50 (63.5)	**63-76KB51**	6.34 (161)	5.94 (151)
3.00 (76.2)	**63-76KB51**	8.23 (209)	6.61 (168)
4.00 (101.6)	**100-102KB51**	8.23 (209)	6.61 (168)

PTFE coated housing upon request

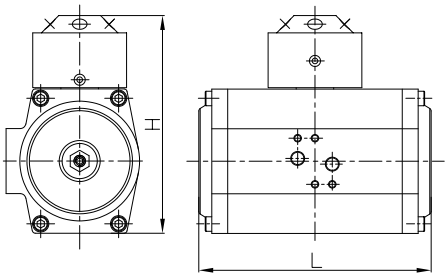

Horizontal pneumatic actuator (aluminium housing), double acting 0° - 180° (air/air)

VALVE SIZE inch (mm)	Type	L	H
1.00 (25.4)	**25-63KB180**	9.25 (235)	5.94 (151)
1.50 (38.1)	**25-63KB180**	9.25 (235)	5.94 (151)
2.00 (50.8)	**25-63KB180**	9.25 (235)	5.94 (151)
2.50 (63.5)	**25-63KB180**	9.25 (235)	5.94 (151)
3.00 (76.2)	**65-80KB180**	12.24 (311)	6.61 (168)
4.00 (101.6)	**100-102KB180**	12.24 (311)	6.61 (168)
6.00 (152.4)	**150KB180**	17.64 (448)	8.31 (211)

PTFE coated housing upon request

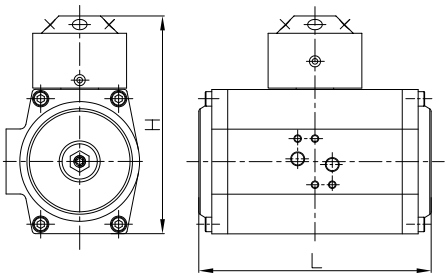

Horizontal 3-position pneumatic actuator (aluminium housing), double acting 0° - 90° - 180° (air/air)

VALVE SIZE inch (mm)	Type	L	H
1.00 (25.4)	**25-63KB52**	13.54 (344)	5.94 (151)
1.50 (38.1)	**25-63KB52**	13.54 (344)	5.94 (151)
2.00 (50.8)	**25-63KB52**	13.54 (344)	5.94 (151)
2.50 (63.5)	**25-63KB52**	13.54 (344)	5.94 (151)
3.00 (76.2)	**65-80KB52**	17.09 (434)	6.61 (168)
4.00 (101.6)	**100-102KB52**	17.09 (434)	6.61 (168)
6.00 (152.4)	**150KB52**	24.84 (631)	8.31 (211)

PTFE coated housing upon request

SPARE PARTS AND ACCESSORIES

For arc valves - chapter 2 only

Inductive proximity switch (double sensor), 24V DC for horizontal pneumatic actuator

VALVE SIZE inch (mm)	Type
1.00 (25.4)	25-102M55
1.50 (38.1)	25-102M55
2.00 (50.8)	25-102M55
2.50 (63.5)	25-102M55
3.00 (76.2)	25-102M55
4.00 (101.6)	25-102M55
6.00 (152.4)	25-102M55

Inductive proximity switch (double sensor), 20-250V AC for horizontal pneumatic actuator

VALVE SIZE inch (mm)	Type
1.00 (25.4)	25-102M55A
1.50 (38.1)	25-102M55A
2.00 (50.8)	25-102M55A
2.50 (63.5)	25-102M55A
3.00 (76.2)	25-102M55A
4.00 (101.6)	25-102M55A
6.00 (152.4)	25-102M55A

Inductive proximity switch (double sensor), 8.2V DC for horizontal pneumatic actuator, Ex

VALVE SIZE inch (mm)	Type
1.00 (25.4)	25-102M55AT
1.50 (38.1)	25-102M55AT
2.00 (50.8)	25-102M55AT
2.50 (63.5)	25-102M55AT
3.00 (76.2)	25-102M55AT
4.00 (101.6)	25-102M55AT
6.00 (152.4)	25-102M55AT

Indicator for horizontal pneumatic actuator, 0° - 90° (180°)

VALVE SIZE inch (mm)	Type
1.00 (25.4)	25-102M55ExSt
1.50 (38.1)	25-102M55ExSt
2.00 (50.8)	25-102M55ExSt
2.50 (63.5)	25-102M55ExSt
3.00 (76.2)	25-102M55ExSt
4.00 (101.6)	25-102M55ExSt
6.00 (152.4)	25-102M55ExSt

SPARE PARTS AND ACCESSORIES

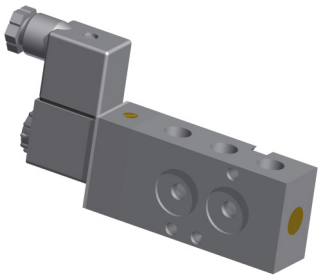

Consists of:
2 x 5/2 solenoid valve
1 x mounting plate
incl. complete tubing

For arc valves - chapter 2 only

5/2 Solenoid valve with cable plug for horizontal pneumatic actuator

VALVE SIZE inch (mm)	Type		
1.00 (25.4)	25-102MVA24D	24V DC	G 1/4
	25-102MVA110A	110V AC	
	25-102MVA230A	230V AC	
1.50 (38.1)	25-102MVA24D	24V DC	G 1/4
	25-102MVA110A	110V AC	
	25-102MVA230A	230V AC	
2.00 (50.8)	25-102MVA24D	24V DC	G 1/4
	25-102MVA110A	110V AC	
	25-102MVA230A	230V AC	
2.50 (63.5)	25-102MVA24D	24V DC	G 1/4
	25-102MVA110A	110V AC	
	25-102MVA230A	230V AC	
3.00 (76.2)	25-102MVA24D	24V DC	G 1/4
	25-102MVA110A	110V AC	
	25-102MVA230A	230V AC	
4.00 (101.6)	25-102MVA24D	24V DC	G 1/4
	25-102MVA110A	110V AC	
	25-102MVA230A	230V AC	

Control unit for horizontal 3-position pneumatic actuator

VALVE SIZE inch (mm)	Type		
1.00 (25.4)	25-102STV24D	24V DC	G 1/4
	25-102STV110A	110V AC	
	25-102STV230A	230V AC	
1.50 (38.1)	25-102STV24D	24V DC	G 1/4
	25-102STV110A	110V AC	
	25-102STV230A	230V AC	
2.00 (50.8)	25-102STV24D	24V DC	G 1/4
	25-102STV110A	110V AC	
	25-102STV230A	230V AC	
2.50 (63.5)	25-102STV24D	24V DC	G 1/4
	25-102STV110A	110V AC	
	25-102STV230A	230V AC	
3.00 (76.2)	25-102STV24D	24V DC	G 1/4
	25-102STV110A	110V AC	
	25-102STV230A	230V AC	
4.00 (101.6)	25-102STV24D	24V DC	G 1/4
	25-102STV110A	110V AC	
	25-102STV230A	230V AC	

SPARE PARTS AND ACCESSORIES

For arc valves - chapter 2 only

Set of wearing parts for horizontal pneumatic actuator

Consists of:
2 x piston guiding ring
2 x guiding segment
1 x slip ring "top"
1 x slip ring "bottom"

VALVE SIZE inch (mm)	Type
1.00 (25.4)	25-63W
1.50 (38.1)	25-63W
2.00 (50.8)	25-63W
2.50 (63.5)	25-63W
3.00 (76.2)	25-63W
4.00 (101.6)	25-63W

O-ring set for horizontal pneumatic actuator

Consists of:
2 x gasket for cap
2 x O-ring "piston"
2 x O-ring "drive pinion"
2 x O-ring "adjusting screw"
1 x O-ring "inside end position adjustment"

VALVE SIZE inch (mm)	Type
1.00 (25.4)	25-630R
1.50 (38.1)	25-630R
2.00 (50.8)	25-630R
2.50 (63.5)	25-630R
3.00 (76.2)	65-1020R
4.00 (101.6)	65-1020R

Electro-pneumatic positioner for horizontal pneumatic actuator, 4-20mA / 24V DC

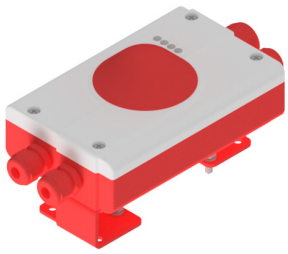

VALVE SIZE inch (mm)	Type
1.00 (25.4)	25-102SBE
1.50 (38.1)	25-102SBE
2.00 (50.8)	25-102SBE
2.50 (63.5)	25-102SBE
3.00 (76.2)	25-102SBE
4.00 (101.6)	150SBE

Heated bearing cap (water/steam)

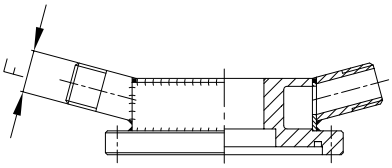

VALVE SIZE inch (mm)	Type	F*
1.00 (25.4)	25SD505H	G 1/8
1.50 (38.1)	38-40SD505H	R 1/2
2.00 (50.8)	50-51SD505H	R 1/2
2.50 (63.5)	65-76SD505H	R 1/2
3.00 (76.2)	100-102SD505H	R 1/2
4.00 (101.6)	150D505H upon request	R 1/2

* according DIN EN 10226-1

5

SPARE PARTS AND ACCESSORIES

For pig diverter arc valves - chapter 3 only

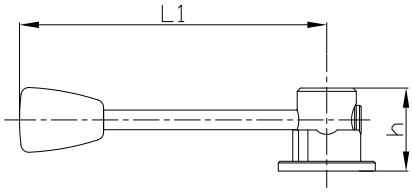

Standard handle, 3 x 120°

VALVE SIZE inch (mm)	Type	L1	h
1.00 (25.4)	**38-40SD506-120**	6.30 (160)	2.01 (51)
1.50 (38.1)	**50-63SD506-120**	7.48 (190)	2.01 (51)
2.00 (50.8)	**50-63SD506-120**	7.48 (190)	2.01 (51)
2.50 (63.5)	**65-80SD506-120**	7.48 (190)	2.01 (51)
3.00 (76.2)	**100-102SD506-120**	10.63 (270)	2.01 (51)

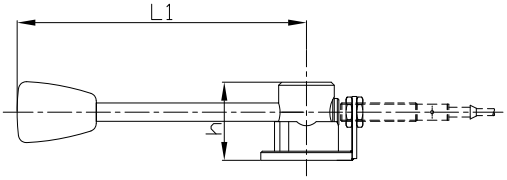

Standard handle with feedback bracket M12, 0° - 120°

VALVE SIZE inch (mm)	Type	L1	h
1.50 (38.1)	**25-40SD506-120R**	6.30 (160)	2.01 (51)
2.00 (50.8)	**50-63SD506-120R**	7.48 (190)	2.01 (51)
2.50 (63.5)	**50-63SD506-120R**	7.48 (190)	2.01 (51)
3.00 (76.2)	**65-80SD506-120R**	7.48 (190)	2.01 (51)
4.00 (101.6)	**100-102SD506-120R**	10.63 (270)	2.01 (51)

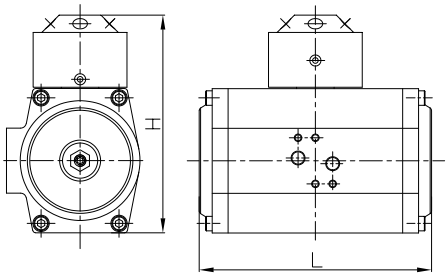

Horizontal pneumatic actuator (aluminium housing), double acting 0° - 120° (air/air)

VALVE SIZE inch (mm)	Type	L1	h
1.50 (38.1)	**38-63KB50V**	7.17 (182)	6.18 (157)
2.00 (50.8)	**38-63KB50V**	7.17 (182)	6.18 (157)
2.50 (63.5)	**38-63KB50V**	7.17 (182)	6.18 (157)
3.00 (76.2)	**65-80KB50V**	9.29 (236)	6.85 (174)
4.00 (101.6)	**100-102KB50V**	9.29 (236)	6.85 (174)

PTFE coated housing upon request

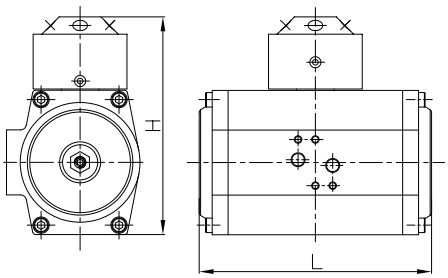

Horizontal pneumatic actuator (aluminium housing), double acting 0° - 120° (air/air)

VALVE SIZE inch (mm)	Type	L1	h
1.50 (38.1)	**38-63KB52V**	16.14 (410)	6.18 (157)
2.00 (50.8)	**38-63KB52V**	16.14 (410)	6.18 (157)
2.50 (63.5)	**38-63KB52V**	16.14 (410)	6.18 (157)
3.00 (76.2)	**65-80KB52V**	20.39 (518)	6.85 (174)
4.00 (101.6)	**100-102KB52V**	20.39 (518)	6.85 (174)

PTFE coated housing upon request

SPARE PARTS AND ACCESSORIES

For pig diverter arc valves - chapter 3 only

Inductive proximity switch (double sensor), 24V DC for horizontal pneumatic actuator

VALVE SIZE inch (mm)	Type
1.50 (38.1)	25-102M55
2.00 (50.8)	25-102M55
2.50 (63.5)	25-102M55
3.00 (76.2)	25-102M55
4.00 (101.6)	25-102M55

Inductive proximity switch (double sensor), 20-250V AC for horizontal pneumatic actuator

VALVE SIZE inch (mm)	Type
1.50 (38.1)	25-102M55A
2.00 (50.8)	25-102M55A
2.50 (63.5)	25-102M55A
3.00 (76.2)	25-102M55A
4.00 (101.6)	25-102M55A

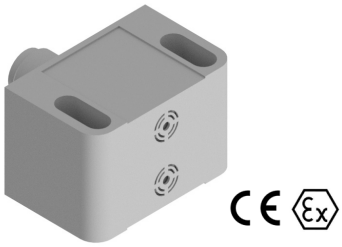

Inductive proximity switch (double sensor), 8.2V DC for horizontal pneumatic actuator, Ex

VALVE SIZE inch (mm)	Type
1.50 (38.1)	25-102M55AT
2.00 (50.8)	25-102M55AT
2.50 (63.5)	25-102M55AT
3.00 (76.2)	25-102M55AT
4.00 (101.6)	25-102M55AT

Indicator for horizontal pneumatic actuator, 0° - 120° (240°)

VALVE SIZE inch (mm)	Type
1.50 (38.1)	38-102SN53
2.00 (50.8)	38-102SN53
2.50 (63.5)	38-102SN53
3.00 (76.2)	38-102SN53
4.00 (101.6)	38-102SN53

SPARE PARTS AND ACCESSORIES

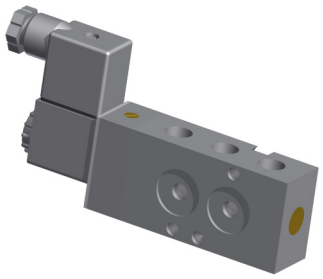

Consists of:
2 x 5/2 solenoid valve
1 x mounting plate
incl. complete tubing

For pig diverter arc valves - chapter 3 only

5/2 Solenoid valve with cable plug for horizontal pneumatic actuator

VALVE SIZE inch (mm)	Type		
1.50 (38.1)	25-102MVA24D	24V DC	G 1/4
	25-102MVA110A	110V AC	
	25-102MVA230A	230V AC	
2.00 (50.8)	25-102MVA24D	24V DC	G 1/4
	25-102MVA110A	110V AC	
	25-102MVA230A	230V AC	
2.50 (63.5)	25-102MVA24D	24V DC	G 1/4
	25-102MVA110A	110V AC	
	25-102MVA230A	230V AC	
3.00 (76.2)	25-102MVA24D	24V DC	G 1/4
	25-102MVA110A	110V AC	
	25-102MVA230A	230V AC	
4.00 (101.6)	25-102MVA24D	24V DC	G 1/4
	25-102MVA110A	110V AC	
	25-102MVA230A	230V AC	

Control unit for horizontal 3-position pneumatic actuator

VALVE SIZE inch (mm)	Type		
1.50 (38.1)	25-102STV24D	24V DC	G 1/4
	25-102STV110A	110V AC	
	25-102STV230A	230V AC	
2.00 (50.8)	25-102STV24D	24V DC	G 1/4
	25-102STV110A	110V AC	
	25-102STV230A	230V AC	
2.50 (63.5)	25-102STV24D	24V DC	G 1/4
	25-102STV110A	110V AC	
	25-102STV230A	230V AC	
3.00 (76.2)	25-102STV24D	24V DC	G 1/4
	25-102STV110A	110V AC	
	25-102STV230A	230V AC	
4.00 (101.6)	25-102STV24D	24V DC	G 1/4
	25-102STV110A	110V AC	
	25-102STV230A	230V AC	

SPARE PARTS AND ACCESSORIES

For pig diverter arc valves - chapter 3 only

Set of wearing parts for horizontal pneumatic actuator

Consists of:
2 x piston guiding ring
2 x guiding segment
1 x slip ring "top"
1 x slip ring "bottom"

VALVE SIZE inch (mm)	Type
1.50 (38.1)	**25-63W**
2.00 (50.8)	**25-63W**
2.50 (63.5)	**25-63W**
3.00 (76.2)	**25-63W**
4.00 (101.6)	**25-63W**

O-ring set for horizontal pneumatic actuator

Consists of:
2 x gasket for cap
2 x O-ring "piston"
2 x O-ring "drive pinion"
2 x O-ring "adjusting screw"
1 x O-ring "inside end position adjustment"

VALVE SIZE inch (mm)	Type
1.50 (38.1)	**25-630R**
2.00 (50.8)	**25-630R**
2.50 (63.5)	**25-630R**
3.00 (76.2)	**65-1020R**
4.00 (101.6)	**65-1020R**

Heated bearing cap (water/steam)

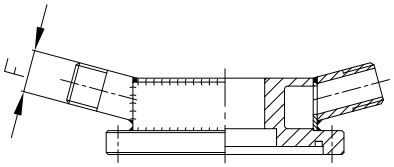

VALVE SIZE inch (mm)	Type	F*
1.50 (38.1)	**38-40SD505H**	R 1/2
2.00 (50.8)	**50-51SD505H**	R 1/2
2.50 (63.5)	**65-76SD505H**	R 1/2
3.00 (76.2)	**100-102SD505H**	R 1/2
4.00 (101.6)	**150D505H upon request**	R 1/2

* according DIN EN 10226-1

5

LIAG® DMV PIGGING SYSTEM

Process systems cleaned with pigs are becoming increasingly important for hygienic processes. Increased environmental consciousness, costly waste water treatment and product losses, superior hygienic standards and production streamlining are some of the reasons.

Features

- Minimum product loss
- Safe separation of product - no mixed phases
- Faster changeovers
- Maximum product quality
- Reduction of time consuming cleaning and waste water generation
- Environmentally sound systems

LIAG® DMV Pigging System
for hygienic processes and viscous, fast hardening media

Sterile processes pose stringent demands on system components

For this processes we offer LIAG® DMV pigging systems featuring 3-A rated CIP/SIP LIAG® free flow arc valves and specifically designed pig launching and receiving stations without dead pockets. Simplifying the modular component design, thread and clamp unions are virtually no longer needed, minimizing typical hygienic risk areas by design. All LIAG® arc valves, even when welded in place, can be easily disassembled for maintenance.

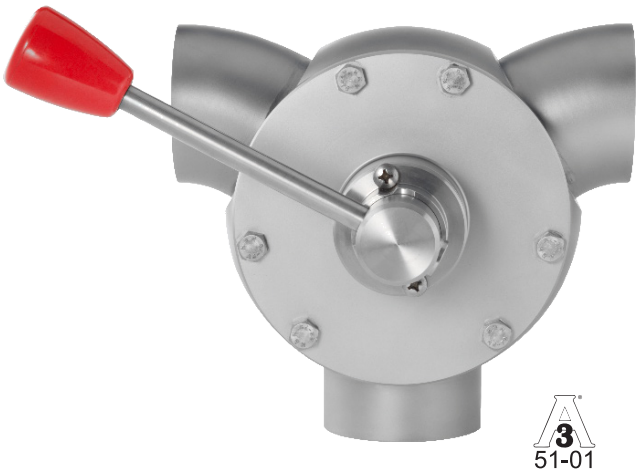

One way
Manual return of pig

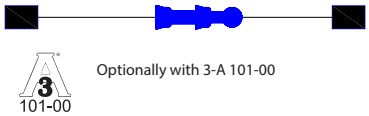

Single loop
Automatic return of pig from receiving to launching station, then manual change of direction

Bi-directional with turning station
Automatic return of pig by use of LIAG® turning station (closed system CIP/SIP automated)

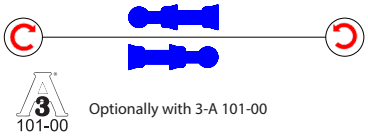

Double loop (Bi-directional)
Automatic return of pig by use of LIAG® pig diverter arc valves (closed system CIP/SIP automated)

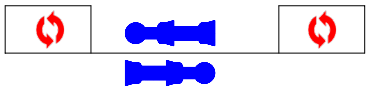

Ring system
Closed system CIP/SIP automated

DMV lip pig - reliable tight

The DMV pigging system works with a 2-seal lip pig and are of homogeneous hygienic design. They offer excellent cleaning effect and are virtually free of wear. Two dynamic lips form a reliable seal with the pipe wall, the action of pressure and counter pressure forms the seals to the pipe wall, compensating for minor deviations in the pipe geometry.

The pigs are highly flexible and can pass tight radii (R= 1.5 x D). Dynamic lip pigs are optionally equipped with a magnet for location and control.

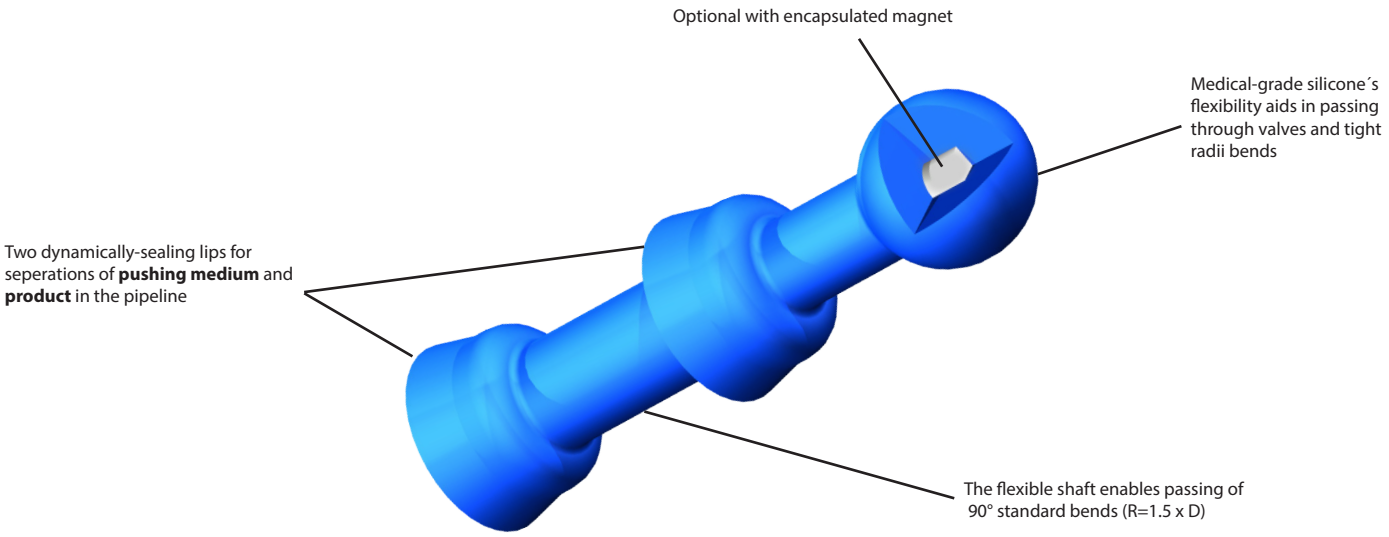

DMV pig launching and receiving station

To satisfy the diverse requirements of the wide range of processes, the optimum pigging procedure is always designed to the specific project.

Features LIAG® DMV Pigging System

- Sterile and closed pipe systems
- No dead pockets with LIAG® CIP/SIP free flow arc valves
- Optimized cleaning result with dynamic DMV lip pigs
- Capable of passing 90° standard bends (R= 1.5 x D)
- Available with in system cleaning of the pig
- Optionally suited for hygienic processes and highly viscous, fast hardening media, e.g. yogurt, dressings, soft cheese, chocolate, tooth paste, etc.
- Optionally 3-A 101-00 and FDA compliance

Technical Data Overview

Basic facts

Norminal sizes:	Inch: 1.5" / 2" / 2.5" / 3" / 4"
Radius of the bends:	Capable of passing 90° standard bends R= 1.5 x D
Multi-mode:	Manual, semi or fully automated
DMV pig pushing media:	e.g. product, water, air etc.

Materials

Inox parts in contact with product:	AISI 316L (1.4404 / 1.4435)
Other inox parts:	AISI 304 (1.4301)
O-ring seals:	EPDM, FKM (Viton®), FEP, other grades upon request
Shutter material:	PTFE, alternatively: PTFE+15% Peek , Tecapeek®
DMV lip pig:	Silicone with FDA compliance

Surfaces

In contact with product:	Ra ≤ Ra ≤ 32 µin (0,8 µm)

Range of Temperature

Standard:	-13°F (-25°C) up to +230°F (+110°C)
Optional:	-13°F (-25°C) up to +302°F (+150°C)

Pushing pressure DMV lip pig

Depending on product (viscosity) and length of the pipe work:
min. 14.5 psi - max. 145 psi (min. 1 bar - max. 10 bar)

Further option

3-A 101-00 and FDA compliance

Rentability

For ROI calculations please visit our website www.laufer-valve.com

Important note

LIAG® DMV pigs should only be used in pigging systems, which are designed for this type of pig. The supplier will not assume any kind of function warranty or product liability and no responsibility for any kind of damage to persons or property due to improper use.

LIAG® DMV PIGGING SYSTEM

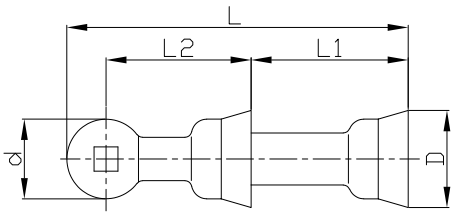

DMV silicone lip pig with magnet

VALVE SIZE inch (mm)	Type	suitable for ID	Ø d	Ø D	L	L1	L2
1.50 (38.1)	**38-40DMV**	1.38-1.57 (35-40)	1.34 (34)	1.69 (43)	6.46 (164)	2.91 (74)	2.87 (73)
2.00 (50.8)	**50-51DMV**	1.85-2.20 (47-56)	1.81 (46)	2.20 (56)	7.87 (200)	3.62 (92)	3.35 (85)
2.50 (63.5)	**63-65DMV**	2.32-2.76 (59-70)	2.28 (58)	2.83 (72)	10.39 (264)	5.12 (130)	4.13 (105)
3.00 (76.2)	**76DMV**	2.83-3.11 (72-79)	2.74 (69.5)	3.15 (80)	11.34 (288)	5.04 (128)	4.92 (125)
4.00 (101.6)	**100-102DMV**	3.78-4.17 (96-106)	3.74 (95)	4.21 (107)	14.76 (375)	6.38 (162)	6.52 (165.5)

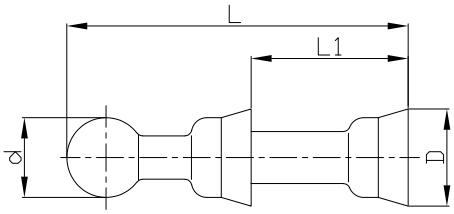

DMV silicone lip pig without magnet

VALVE SIZE inch (mm)	Type	suitable for ID	Ø d	Ø D	L	L1	L2
1.50 (38.1)	**38-40DV**	1.38-1.57 (35-40)	1.34 (34)	1.69 (43)	6.46 (164)	2.91 (74)	2.87 (73)
2.00 (50.8)	**50-51DV**	1.85-2.20 (47-56)	1.81 (46)	2.20 (56)	7.87 (200)	3.62 (92)	3.35 (85)
2.50 (63.5)	**63-65DV**	2.32-2.76 (59-70)	2.28 (58)	2.83 (72)	10.39 (264)	5.12 (130)	4.13 (105)
3.00 (76.2)	**76DV**	2.83-3.11 (72-79)	2.74 (69.5)	3.15 (80)	11.34 (288)	5.04 (128)	4.92 (125)

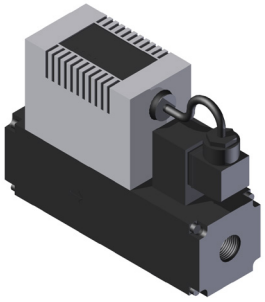

Mass flow controller to adjust the pigging speed in long pipe lines

SIZE inch (mm)	Type	
1.50 (38.1)	**38-102MDR8626**	G 1/2
2.00 (50.8)	**38-102MDR8626**	G 1/2
2.50 (63.5)	**38-102MDR8626**	G 1/2
3.00 (76.2)	**38-102MDR8626**	G 1/2
4.00 (101.6)	**38-102MDR8626**	G 1/2

Technical Data:
4-20mA (0-10V), 24V DC, 145psi max. (10bar max.)

LIAG® DMV PIGGING SYSTEM

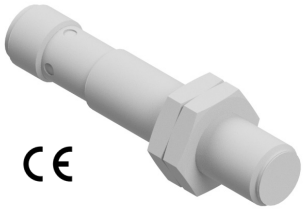

Magnet sensor for pig detection M12, 24V DC pluggable

VALVE SIZE inch (mm)	Type
1.50 (38.1)	38-102MSB12
2.00 (50.8)	38-102MSB12
2.50 (63.5)	38-102MSB12
3.00 (76.2)	38-102MSB12
4.00 (101.6)	38-102MSB12

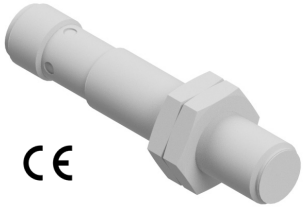

Magnet sensor for pig detection M12, 8.2V DC pluggable, Ex

VALVE SIZE inch (mm)	Type
1.50 (38.1)	38-102MSB12T
2.00 (50.8)	38-102MSB12T
2.50 (63.5)	38-102MSB12T
3.00 (76.2)	38-102MSB12T
4.00 (101.6)	38-102MSB12T

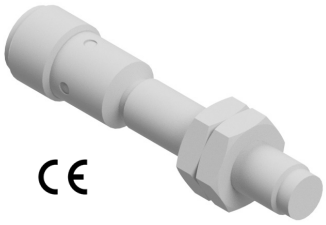

Inductive proximity switch M8 of metal, 24V DC pluggable for blind nut detection

VALVE SIZE inch (mm)	Type
1.50 (38.1)	38-102M55DSt
2.00 (50.8)	38-102M55DSt
2.50 (63.5)	38-102M55DSt
3.00 (76.2)	38-102M55DSt
4.00 (101.6)	38-102M55DSt

Magnet field detector for pig detection

VALVE SIZE inch (mm)	Type
1.50 (38.1)	38-102MD90
2.00 (50.8)	38-102MD90
2.50 (63.5)	38-102MD90
3.00 (76.2)	38-102MD90
4.00 (101.6)	38-102MD90

Subject to technical alterations, errors and misprints excepted.

LAUFER Valve Technology Inc., 2300 Walnut Ave, Suite Q-R, Signal Hill, CA 90755
T: +1.562.232.4777 - sales@laufer-valve.com - www.laufer-valve.com

Copyright © LAUFER Valve Technology Inc. 2024 - All rights reserved