COMMON FINISHES		
DESIGNATION	PROCESS CONTACT	NON-PROCESS CONTACT
-1	MILL	MILL
-7	32 RA	32 RA
-PL	20 RA	32 RA
-PO	20 RA EP	32 RA
-PM	15 RA EP	32 RA

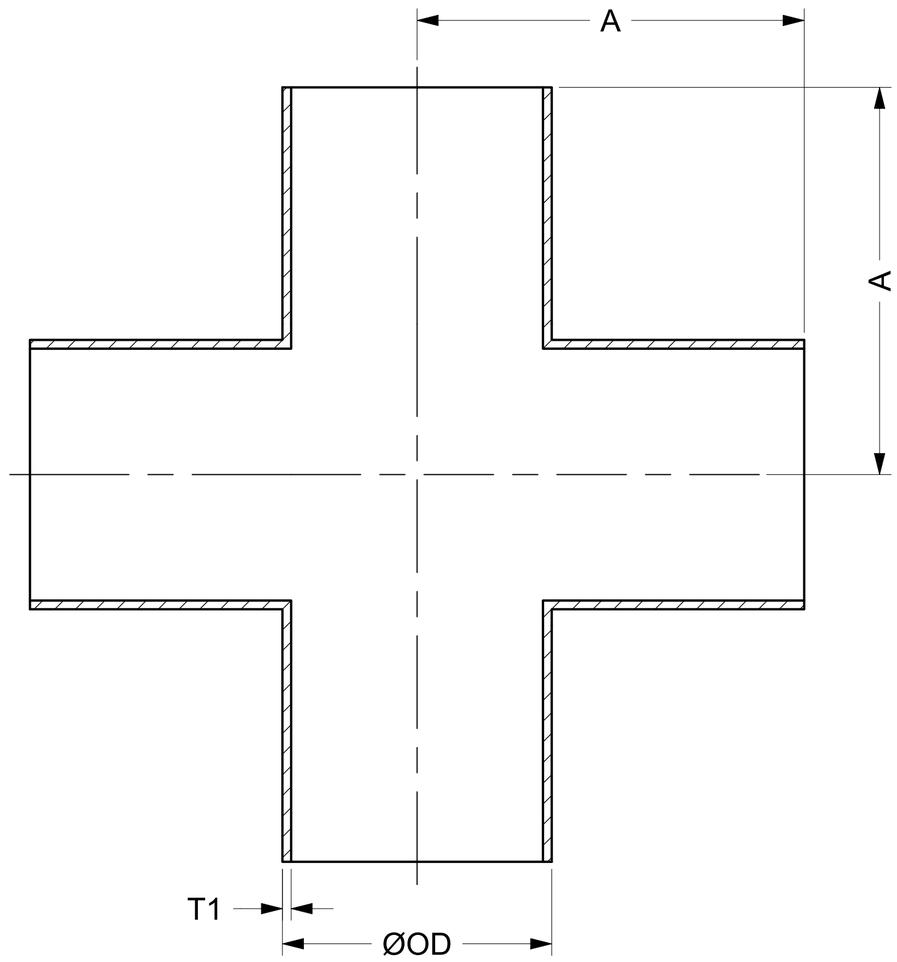

SECTION A-A

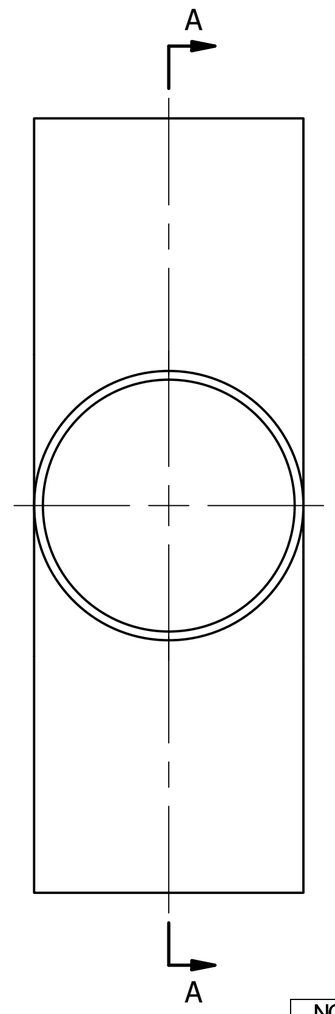

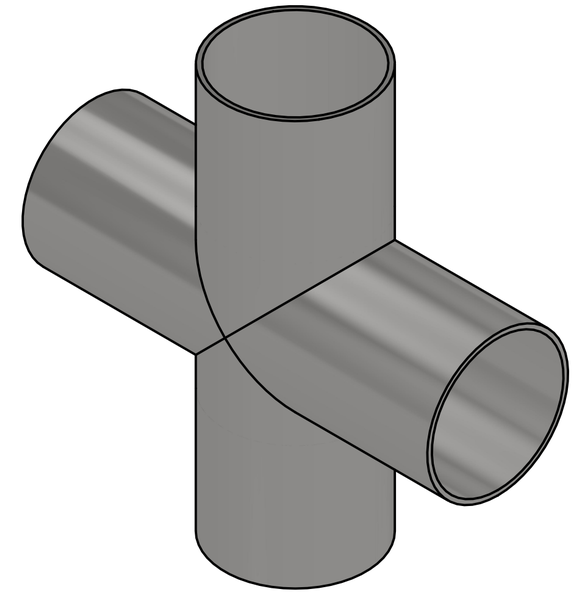

NOMINAL SIZE		A		OD		T1	
IN	MM	IN	MM	IN	MM	IN	MM
0.25	6.35	1.750	44.45	0.250	6.35	0.035	0.89
0.375	9.53	1.750	44.45	0.375	9.53	0.035	0.89
0.5	12.70	1.875	47.63	0.500	12.70	0.065	1.65
0.75	19.05	2.000	50.80	0.750	19.05	0.065	1.65
1	25.40	2.125	53.98	1.000	25.40	0.065	1.65
1.5	38.10	2.375	60.33	1.500	38.10	0.065	1.65
2	50.80	2.875	73.03	2.000	50.80	0.065	1.65
2.5	63.50	3.125	79.38	2.500	63.50	0.065	1.65
3	76.20	3.375	85.73	3.000	76.20	0.065	1.65
4	101.60	4.125	104.78	4.000	101.60	0.083	2.11
6	152.40	5.625	142.88	6.000	152.40	0.109	2.77

**** INFORMATION PROVIDED IN THIS DRAWING IS FOR REFERENCE ONLY. FINISH AVAILABILITY DEPENDANT ON MATERIAL***

CSI 800.654.5635 csidesigns.com

PART NO.: B9WWWW

DESCRIPTION: CROSS, BW

MATERIAL OPTIONS:
304/304L SS
316/316L SS
AL-6XN® - N08367
HASTELLOY® C-22® - N06022

DWG NO. CDB9WWWW

REV. -

CREATION DATE 16JAN2026

SHEET 1 OF 1